TDFM-136B

VHF/FM DIGITAL AIRBORNE TRANSCEIVER

MAINTENANCE MANUAL

Til Document: 08RE395
Rev. A

AUG 2021

Technisonic Industries Limited
www.til.ca

copyright © Technisonic Industries Ltd.

Document Revision History 08RE399				
REV	PAGE	DESCRIPTION	DATE	EDIT BY
N/C		Original document release.	24 APR 2020	A.L.
A		Remove embedded docs: Operating Instructions' Installation Instructions and Final Test / Final Test Data Sheet. Fix PCB renderings (change from colour to black and white, remove inner layers.) Add 'Theory of operation'. Add missing assembly: Heatsink Improve resolution of all embedded components. Fix Title page photo.	AUG 2021	A.M.

TABLE OF CONTENTS

SECTION 1 – INTRODUCTION 1

1.1 General description 1
Main MCU Board 1
Analog Audio Board 1
Carrier Board 1
RF Modules 2
Front Panel 2
Heatsink Assembly 2
1.2 Theory of Operation 2
Module A1 – Microcontroller Board 3
Module A2 – Audio Board 9
Module A3 – RF Carrier Board 11
Module A4 – Front Panel Assembly 12

SECTION 2 – TRANSCEIVER DISASSEMBLY / ASSEMBLY 15

2.1 Transceiver Disassembly 15
Removing The Lids 15
Removing The Nexus RF Modules 16
Removing The Carrier Board 18
Removing The Bottom Tray 19
Removing The Analog Audio Board 21
Removing The MCU Board 21
Removing The Heat Sink Assembly 23
Removing The Heat Sink Fan 24
Replacing The Antenna Connector Board 24
Front Panel Disassembly 25
2.2 Transceiver Assembly 28
2.3 Returning the Transceiver to Service 28

SECTION 3 – SCHEMATIC DIAGRAMS 29

3.1 Front Panel Display Schematic 30
3.2 Front Panel Keypad Schematic 31
3.3 Front Panel MCU Schematic 33
3.4 Front Panel DIN Riser Schematic 37
3.5 Main MCU Schematic 38
3.6 Analog Audio Schematic – original 46
3.7 Analog Audio Schematic – new 49
3.8 Module Carrier Schematic 52
3.9 Antenna Connector Schematic 55

SECTION 4 – PCB LAYOUTS 57

4.1 Front Panel Display Board 58
4.2 Front Panel Keypad Board 59
4.3 Front Panel MCU Board 60
4.4 Front Panel DIN Interface Board 61
4.5 Antenna Connector Interface Board 61
4.7 Analog Audio Board (original) 64
4.8 Analog Audio Board (new) 65
4.9 RF Carrier Board 66

SECTION 5 – PARTS LISTS 69

5.1 Final Assembly: 082022-3-10 70
5.2 Front Panel Assembly, Green: 082018-1 72
5.3 Front Panel Assembly, NV: 082018-3 73
5.4 Front Panel Sub-Assembly, Green: 082016-1 74
5.5 Front Panel Sub-Assembly, NV: 082016-3 74
5.6 Front Panel Display: 982500-3 75
5.7 Front Panel Keypad: 052857-1 76
5.8 Front Panel MCU: 052853-1 77
5.9 Front Panel DIN Riser: 052885-1 80
5.10 Main MCU: 052873-1 81
5.11 Analog Audio (original): 072987-1.....86
5.12 Analog Audio (new): 072987-1 88
5.13 RF Module carrier: 062908-1 90
5.14 Heatsink Assembly: 082021-1 93
5.15 Antenna Connector: 012699-2 94

WARRANTY INFORMATION 95

TABLE OF FIGURES

Figure 1-1. The TDFM-136B System Block Diagram..... 2
Figure 1-2. The MCUBlock Diagram.....3
Figure 1-3. The Transceiver Mounted 15 Pin DSub Connector..... 3
Figure 1-4. The Audio Card Block Diagram.....10
Figure 1-5. The Main RF Module Block Diagram..... 11
Figure 1-6. The Front Panel Asssembly Block Diagram.....12

Figure 2-1. The Cover Screw Locations 15
Figure 2-2. Thermal Pads On RF Modules 16
Figure 2-3. RF Coax Cable Connector Locations 16
Figure 2-4. The RF Module Mounting Screw Locations 17
Figure 2-5. The Carrier Board With RF Modules Removed 17
Figure 2-6. The RF Carrier Board Standoff And Screw Locations 18
Figure 2-7. Interfering Chassis Screw Locations 18
Figure 2-8. The RF Carrier Board Removed 19
Figure 2-9. The Bottom Tray Securing Screw Locations 19
Figure 2-10. The Front Panel Screw Locations 20
Figure 2-11. The Front Panel Assembly Removed 20
Figure 2-12. The Audio Board Screw Locations.....21
Figure 2-13. The MCU Board Fastener Locations.....22
Figure 2-14. Disconnecting The Heatsink Fan Connector 22
Figure 2-15. Side Panel To Rear Heatsink Screw Locations 23
Figure 2-16. Rear Heatsink To RF Heatsink Block Screw Locations 23
Figure 2-17. Rear Heatsink Fan Screw Locations 24
Figure 2-18. Rear Heatsink With Antenna Connector Board Removed 24
Figure 2-19. Front Panel Knob And Screw Locations 25
Figure 2-20. Front Panel Face Plate Removed 25
Figure 2-21. Front Panel Metal Plate Switch Fastener Locations 26
Figure 2-22. Display Board Lift Points And Keypad Board Fastener Locations 26
Figure 2-23. Front Panel PCB Components Disassembled 27
Figure 2-23. Display Lens Components Disassembled 27

Figure 4-1. Front Panel Display Board Top View 46
Figure 4-2. Front Panel Display Board Bottom View 46
Figure 4-3. Front Panel Keypad Board Top View 47
Figure 4-4. Front Panel Keypad Board Bottom View 47
Figure 4-5. Front Panel MCU Board Top View 48
Figure 4-6. Front Panel MCU Board Bottom View 48
Figure 4-7. Front Panel DIN Interface Board Top And Bottom Views 49
Figure 4-8. Antenna Connector Interface Board Top And Bottom Views 49
Figure 4-9. Main MCU Board Top View 50
Figure 4-10. Main MCU Board Bottom View 51
Figure 4-11. Analog Audio Board (original) Top View 52
Figure 4-12. Analog Audio Board (original) Bottom View 52
Figure 4-11. Analog Audio Board (new) Top View 53
Figure 4-12. Analog Audio Board (new) Bottom View 53
Figure 4-11. RF Carrier Board Top View 54
Figure 4-12. RF Carrier Board Bottom View 55

TABLE OF TABLES

Table 1-1. Rear Connector Pin Assignments....4
Table 1-2. Mode Select Jumper Shunt Positions....5
Table 1-3. RF Interface Pin Assignments....5
Table 1-4. Front Panel nterface Connector Pin Assignments....7
Table 1-5. Audio Board Interface (JP4) Connector Pin Assignements....7
Table 1-6. Audio Board Interface (JP5) Connector Pin Assignements....8
Table 1-7. Audio Board Interface (JP6) Connector Pin Assignements....8
Table 1-8. Audio Board Interface (JP2) Connector Pin Assignements....9

Table 2-1. TDFM-136B Return To Service Test Documents....28

Table 3-1. TDFM-136B Component Part Numbers – Schematics Highlighted....29

Table 4-1. TDFM-136B Component Part Numbers – Pcb's Highlighted....57

Table 5-1. TDFM-136B Component Part Numbers – Parts Lists Highlighted....69

SECTION 1

INTRODUCTION

This manual contains maintenance information for the TDFM-136B VHF FM analogue / digital P25 airborne transceiver. Module descriptions, disassembly instructions, schematic diagrams, PCB layouts and parts lists are included.

This manual assumes the reader is qualified to perform maintenance on airborne avionics.

1.1 GENERAL DESCRIPTION

This section provides basic information on the controls and display information provided for the user on the Front Panel of the transceiver. The TDFM-136B has a modular design allowing easy isolation and replacement of faulty modules. The TDFM-136B is made up of the following modules / sub-modules:

- MCU Board
- Audio Card
- Carrier Board
- Front Panel
- RF (Nexus) Modules
- Heat Sink Assembly

These modules are contained where necessary in separate compartments within the main chassis. Descriptions of each module follow.

MCU BOARD

The MCU board is the main module where everything in the TDFM-136B is controlled from. It contains the main microprocessor, power filtering, power supplies, audio output amplifier and the main connector to the back of the radio. Mounting on top of this board is the Audio Card sub module. The MCU board has connections to the Front Panel and carrier board as well. The main firmware resides in the microprocessor which communicates with the other modules.

AUDIO CARD

The audio card is a sub module to the MCU module. It has several audio attenuators which provide volume or level control for each audio path such as main and guard audio volume, mic signal and sidetone level. The audio card is mounted directly on the MCU board.

CARRIER BOARD

The carrier board provides connections from the MCU board to the 2 RF modules. It also incorporates an antenna switching / splitter network so either RF module can transmit on the single antenna port. In receive mode, both RF modules are simultaneously connected to the antenna port. The two RF modules are mounted directly on the carrier board.

RF MODULES

The RF modules are transceiver boards which have the VCO, PA strip, harmonic filter, receiver front end, IF strip and MCU/DSP circuitry built in. Both RF modules are identical and interchangeable. These boards have surface mount BGA and small 0402 components and are not considered field repairable.

FRONT PANEL

The Front Panel module provides a display, keyboard and interface connector for the MCU module. The Front Panel module has its own microprocessor to collect button and switch inputs and control the display modules. It also handles communications with the MCU board using RS485.

HEATSINK ASSEMBLY

The heatsink assembly includes the antenna connector, connector board and cable. This assembly forms the entire rear panel of the chassis and provides most of the cooling for the unit.

1.2 THEORY OF OPERATION

This section provides basic information about the operation of the TDFM-136B transceiver. The transceiver is divided into four functional blocks (A1-A4) as shown in figure 1-1 below.

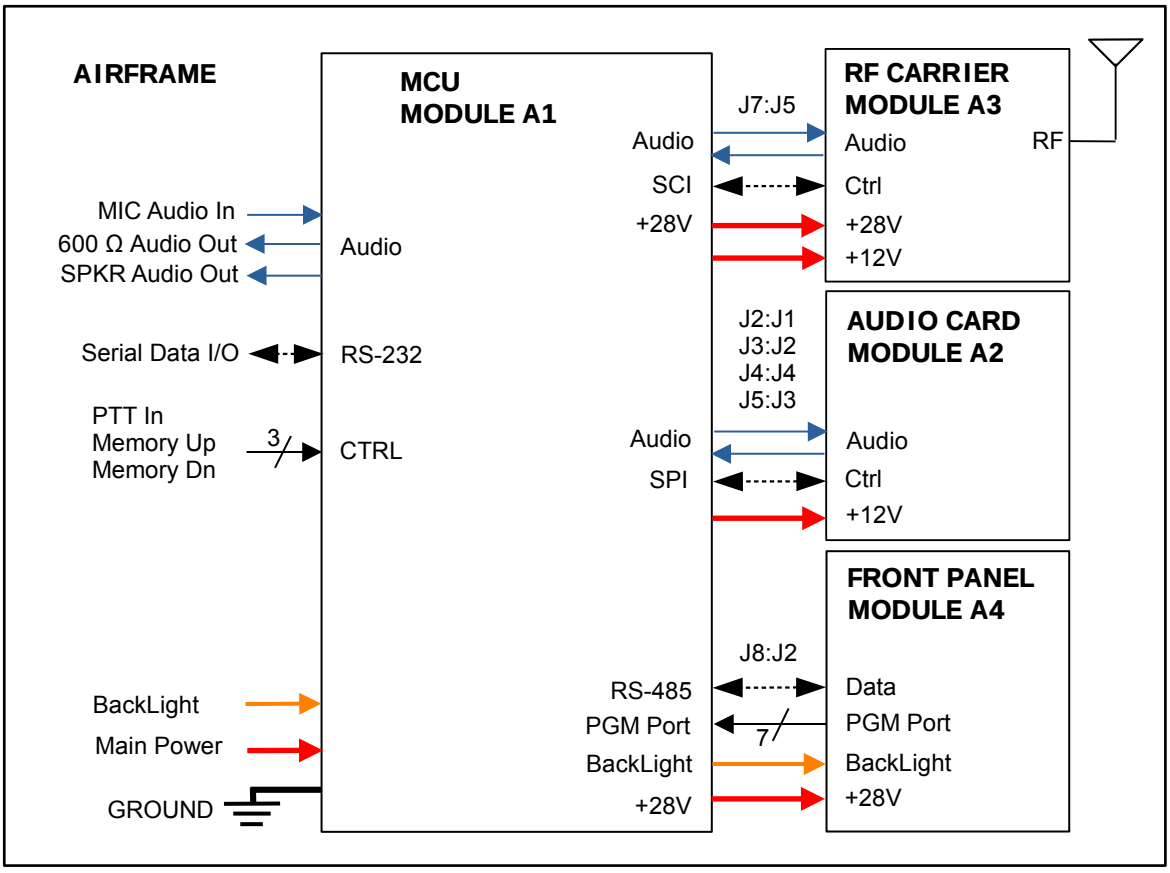

FIGURE 1-1: The TDFM-136B functional block diagram

MODULE A1 – MICROCONTROLLER (MCU) BOARD

The MCU board controls the system and has the major components as shown below in figure 1-2. A discussion of each component follows.

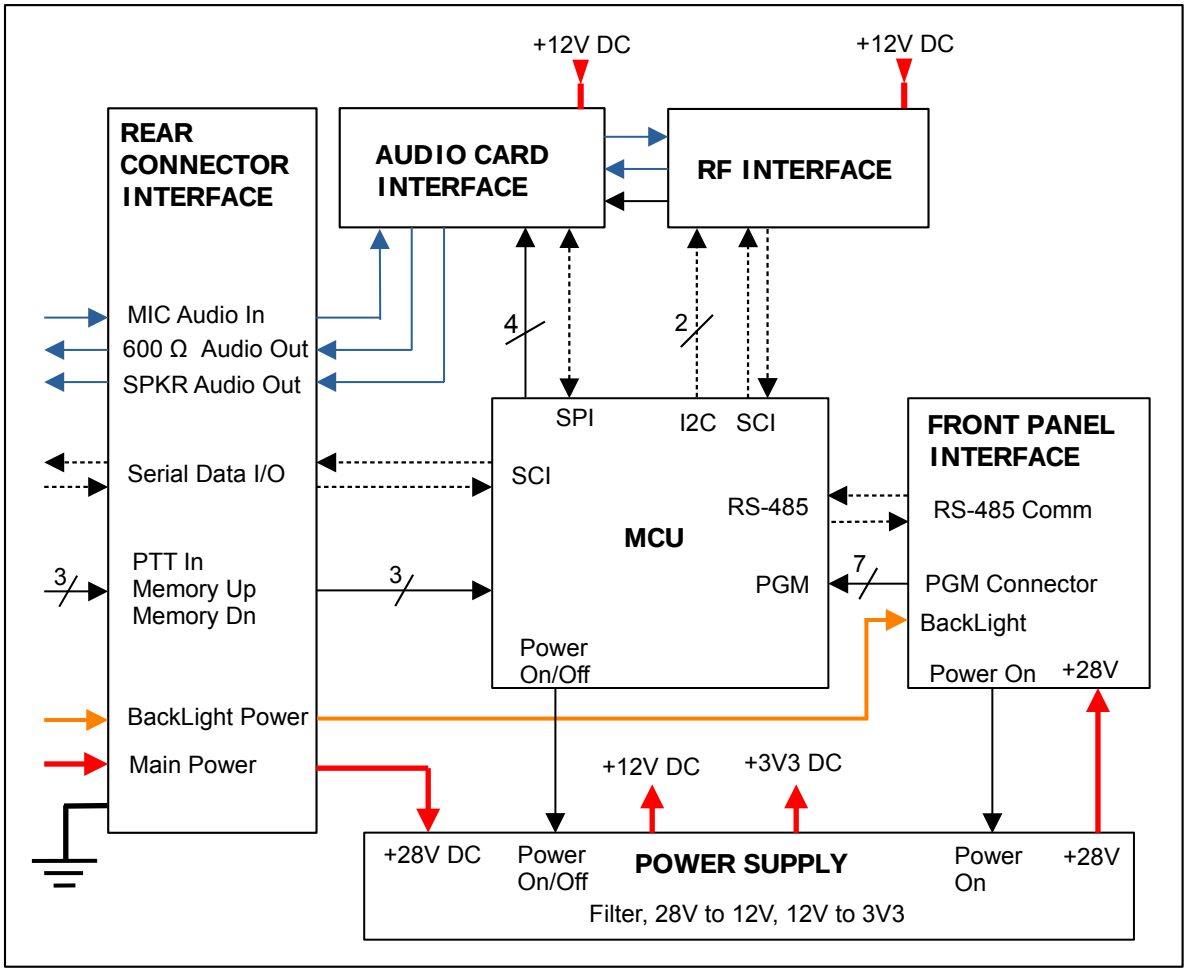

Figure 1-2 The TDFM-136B MCU Block Diagram (Module A1)

Module A1 - Rear Connector Interface

The rear connector is a 15 pin Dsub type connector (male), shown in figure 1-3 below, and is similar to the TFM-138 in signal layout, the only difference being that the data in and data out signals on the TFM-138 have been replaced by serial data in, and serial data out. These pins are used for communicating with the TDFM-136B via established serial protocols such asRS232 and RS485. The pin assignments are shown in table 1-1 below.

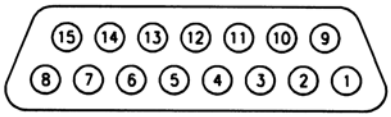

Figure 1-3 The Transceiver Mounted 15 Pin 'D' Connector

Table 1-1. Rear Connector Pin Assignments		
Pin #	Signal	Notes
1	Audio - Headset	Output – 600 Ω
2	Serial Data Out	Output – RS232
3	Power - Panel Lighting	28Vdc Standard, 5Vdc Option
4	Signal - Memory Up	Input – Active Low
5	Signal - Memory Down	Input – Active Low
6	Audio - Microphone	Input
7, 14	Power - Main +28Vdc	Power
8, 15	Power - Main Ground	Power
9	Audio - Speaker	Output – 4 Ω
10	Signal Ground	
11	Serial Data In	Input – RS232
12	Signal – GPIO	Input Or Output
13	Signal – PTT	Input – Active Low

All the signals are RF filtered using surface mount bead inductors right at the pins for low conducted emissions and/or susceptibility. In addition to the inductors, bead metal oxide varistor (mov's) are used to clamp voltages in case of an over-voltage condition as well, these form part of the filter circuit as they have capacitance in the order of a couple of hundred pico -farads.

In addition to the RF filtering, each of the three control lines: ptt, mem up, and mem dn, have over-voltage protection circuit consisting of an input series resistor and a 3.3 volt zener diode, used as a clamp. These active low lines are each pulled high by a pullup resistor.

The power line is fused with a 5 Amp surface mount fuse (accessible from the R.H.S. panel), and a diode provides over-voltage protection. The power then passes through a FET transistor controlled by the MCU that acts as an electronic switch, before being filtered by an inductor capacitor network and being fed to the power supply circuit described below.

While the serial communications protocol is handled by the system MCU, the physical layer voltage levels are set by either a MAX3232E (for RS232) or an ADM3485E (RS485) serial interface chip. The interface chip converts the MCU logic levels (0-3V3) to the appropriate line levels. The interface in use is selected by JP3, and by default the system is set up for RS232 operation.

Module A1 - Power Supply

After on/off switching, the 28Vdc input power is fed to the power supply circuit. This circuit contains 28V to 12V and 12V to 3V3 switching regulator circuits.

The 28V to 12V switch mode regulator circuit consists primarily of an input power filter, a FET based push-pull driver for the main coil, and an output power filter. The drive signals and feedback loop are provided by a LTC3703EGN switch-mode regulator.

The 12Vdc to 3V3dc converter utilizes a LM2678S-3.3 regulator with input and output filters. This “simple switcher” device provides a more integrated solution where lower output power is required.

Module A1 - Microcontroller (MCU)

The MCU in the TDFM-136B is a Freescale MC689S12XEP100. This is a 16 bit MCU that has large internal memory arrays and provides multiple SPI, SCI, A/D converters, multifunction timers, pulse-width modulators, and 119 I/O lines. All program code and operating data is stored in the internal memory, however the channel parameter data is stored in the individual RF modules.

The MCU runs on a clock derived from an external 3.6864 MHz. Crystal. A background debug module (BDM) is provided to allow programming and debugging of the system, and is routed out to a connector for access.

The serial peripheral interface (SPI) is used to control the volume controls and the microphone gain circuits in the audio sub-system. The serial communications interface (SCI) is set up such that one channel talks to each of the P25 modules, one to the Front Panel MCU, one to the Front Panel programming connector, and one is dedicated to the rear connector.

The analog to digital converter is used to sense what type of interface cable has been plugged into the Front Panel programming connector, and to sense the internal temperature of the radio. The timer is used for all software timing functions. The I/O lines provide various status input and control output functions for the entire system.

The user may be able to affect some parameters of the operating mode by placement of a jumper on the mode select jumper block (available inside the left hand side (L.H.S.) cover). Table 1-2 below shows the operating modes and the associated shunt positions. It is also possible to disable the jumper functionality in software.

Table 1-2. Mode Select Jumper Shunt Positions

Mode	Shunt Position	Use	Level Access
0	Out	Flight	L1 To L3
1	In	**Bench Only**	All

Note: Do Not Fly The Radio With Shunt In Place!

Module A1 - RF Interface

The RF interface provides routing and level shifting of signals between the MCU board and the RF modules. The connector pin assignments are shown in table 1-3 below.

Table 1-3. RF Interface Connector Pin Assignments

Pin #	Signal	Notes
1	RF Module #1 – Microphone +	High Side Tx Audio To Module 1
2	RF Module #1 – Microphone -	Low Side Tx Audio To Module 1
3	Signal Ground	
4	RF Module #2 – Microphone +	High Side Tx Audio To Module 2
5	RFModule #2 – Microphone -	Low Side Tx Audio To Module 2
6	Unused	
7	Unused	
8	Signal Ground	
9	Unused	
10	Unused	
11	RF Module #1 – Speaker +	High Side Tx Audio From Module 1
12	RF Module #1 – Speaker -	Low Side Tx Audio From Module 1
13	Signal Ground	
14	RF Module #2 – Speaker +	High Side Tx Audio From Module 2
15	RFModule #2 – Speaker -	Low Side Tx Audio From Module 2

Table 1-3. RF Interface Connector Pin Assignments (continued)

Pin #	Signal	Notes
16	Unused	Unused
17	Unused	Unused
18	Signal Ground	
19	Unused	Unused
20	Unused	Unused
21	RFModule #1 – Rx Data	Control Interface To Module 1
22	RF Module #1 – Tx Data	Control Interface To Module 1
23	Signal Ground	
24	RF Module #2 – Rx Data	Control Interface To Module 2
25	RF Module #2 – Tx Data	Control Interface To Module 2
26	Unused	Unused
27	Unused	Unused
28	Signal Ground	
29	Unused	Unused
30	Unused	Unused
31	RS-485 (A)	Unused
32	RS-485 (B)	Unused
33	3V3 Power	Power For Control Logic
34	SDA – I2C Serial Data	Serial Link To Control Latch For Antenna Switches And RF Module Power On/Off
35	SCI – I2C Serial Clock	Serial Link To Control Latch For Antenna Switches And RF Module Power On/Off
36	Reset Output	Reset Signal To Control Latch.
37	Keyfill Data	P25 Compliant Encryption Keyloader Port
38	ADR1	Address Select For I2C Bus
39	Keyfill Board 0	Select RF Module #1 For Keyload Operation.
40	Keyfill Board 1	Select RF Module #2 For Keyload Operation.
41	+12V Power	Power For RF Modules
42	+12V Power	Power For RF Modules
43	Adr2 Power	Address Select For I2C Bus
44	+28V Power	Power For Antenna Switches
45	+12V Power	Power For RF Modules
46	Power Ground	
47	Power Ground	
48	ADR3	Address Select For I2C Bus
49	Power Ground	
50	Power Ground	

The serial data lines are shifted to RS-232 logic levels before being fed to the RF interface. The analog audio signals are routed directly to and from the audio card..

Module A1 - Front Panel Interface

The Front Panel (F/P) interface consists of one connector (power and signal). The connector pin assignments for the connector are shown in table 1-4.

Table 1-4. Front Panel Interface - Connector Pin Assignment			
Pin #	Signal	Description	Notes
1	RS-485 (A)	Serial Communication Line	Control Interface To Front Panel
2	RS-485 (B)	Serial Communication Line	Control Interface To Front Panel
3	V_Light	Panel Lighting Voltage	
4	FP_PWR_SW	Power-On Signal	Power-Off Is Software Controlled
5	Signal Ground		
6	R2 in	Rx Data From PGM Port	PGM Cable Serial Interface
7	Unused		
8	T2 out	Tx Data To Pgm Port	PGM Cable Serial Interface
9	PGM1	PGM Cable Signal 1	Dependent On Interface Type
10	PGM2	PGM Cable Signal 2	Dependent On Interface Type
11	PGM3	PGM Cable Signal 3	Dependent On Interface Type
12	FP_WRU	PGM Cable Id Line	Selects PGM Cable Interface Type
13	PGM4	PGM Cable Signal 4	Dependent On Interface Type
14	Unused		
15	Power Ground		
16	Signal Ground		
17	Power Ground		
18	Signal Ground		
19	+28V Power		
20	+28V Power		

The Front Panel contains a separate microprocessor that communicates with the main MCU over the RS-485 interface. The panel lighting signal is measured by software to determine the intensity of the Front Panel backlighting. The power-on signal provides the initial signal to turn on the main power switch. Once the main MCU starts it will assert a “power hold” signal to keep the power on. The pgm port is used for channel data loading and encryption key loading. The ID line allows the software to identify which cable has been plugged into the radio.

Module A1 - Audio Card Interface

The audio card handles all audio to, from, and generated within the TDFM-136B. The connector pin assignments for the varioun connections to the MCU board are shown in tables 1-5 through 1-8.

Table 1-5. Audio Card Interface – JP4 Connector Pin Assignment		
Pin #	Signal	Notes
1	B1_Mic+	Microphone Audio To Module #1 (High)
2	B3_Mic+	Unused
3	B1_Mic-	Microphone Audio To Module #1 (Low)
4	B3_Mic-	Unused
5	B2_Mic+	Microphone Audio To Module #2 (High)
6	B4_Mic+	Unused
7	B2_Mic-	Microphone Audio To Module #2 (Low)
Table 1-5. Audio Card Interface – JP4 Connector Pin Assignment (continued)		

Pin #	Signal	Notes
8	B4_Mic-	Unused
9	Signal Ground	
10	Signal Ground	
11	B1_Spkr+	Speaker Out From Module #1 (High)
12	B3_Spkr+	Unused
13	B1_Spkr-	Speaker Out From Module #1 (Low)
14	B3_Spkr-	Unused
15	B2_Spkr+	Speaker Out From Module #2 (High)
16	B4_Spkr+	Unused
17	B2_Spkr-	Speaker Out From Module #2 (Low)
18	B4_Spkr-	Unused
19	Signal Ground	
20	Signal Ground	
21	PCM_BCLK	Unused
22	PCM_MISO	Unused
23	PCM_FS	Unused
24	PCM_MOSI	Unused

Table 1-6. Audio Card Interface – JP5 Connector Pin Assignment

Pin #	Signal	Notes
1	Signal Ground	
2	Signal Ground	
3	Mic_Audio_1	Microphone Input From Rear Connector
4	Mic_Audio_2	Unused
5	+12v Power	
6	+12v Power	
7	Unused	Unused
8	Unused	Unused
9	Signal Ground	
10	Signal Ground	

Table 1-7. Audio Card Interface – JP6 Connector Pin Assignment

Pin #	Signal	Notes
1	Signal Ground	
2	Signal Ground	
3	Audio_Out_1	Audio Out To Power Amplifier (Speaker)
4	Audio_Out_2	Audio Out To Power Amplifier (Headset)
5	+28V Power	
6	+28V Power	
7	Unused	Unused
8	Unused	Unused
9	Signal Ground	
10	Signal Ground	

Table 1-8. Audio Card Interface – JP2 Connector Pin Assignment		
Pin #	Signal	Notes
1	+3V3 Power	
2	+3V3 Power	
3	A0	Unused
4	Audio_Irq1	Voice Chip INT
5	A1	Unused
6	Audio_Irq2	Voice Chip RAC
7	A2	Unused
8	RSTout	Unused
9	Audio_Ctrl_1	Mic Gain SPI Select
10	Signal Ground	
11	Audio_Ctrl_2	Audio Attenuators SPI Select
12	D0	Unused
13	Signal Ground	
14	D1	Unused
15	SCK0	SPI Clock Signal
16	D2	Unused
17	MISO 0	SPI Rx Data
18	D3	Unused
19	MOSI 0	SPI Tx Data
20	Signal Ground	
21	Audio_Ctrl_3	Voice Chip SPI Select
22	D4	Unused
23	Signal Ground	
24	D5	Unused
25	Audio_Ctrl_4	Unused
26	D6	Unused
27	Audio_WE	Unused
28	D7	Unused
29	Audio_RD	Unused
30	Signal Ground	

MODULE A2 – AUDIO CARD

The audio card routes all audio to, from and generated within the TDFM-136B. There are software adjustable amplifiers to set the levels of the incoming audio from the rear connector and pre-set audio amplifiers for audio from the RF boards. These allow the system to be tuned for maximum audio level without clipping. All signals in the system may be combined under software control to produce the transmit audio signals to the RF modules and the receive audio signals to the headset and speaker ports.

A block diagram of the audio card is shown below. Note that some capabilities of the card are not utilized by the TDFM-136B.

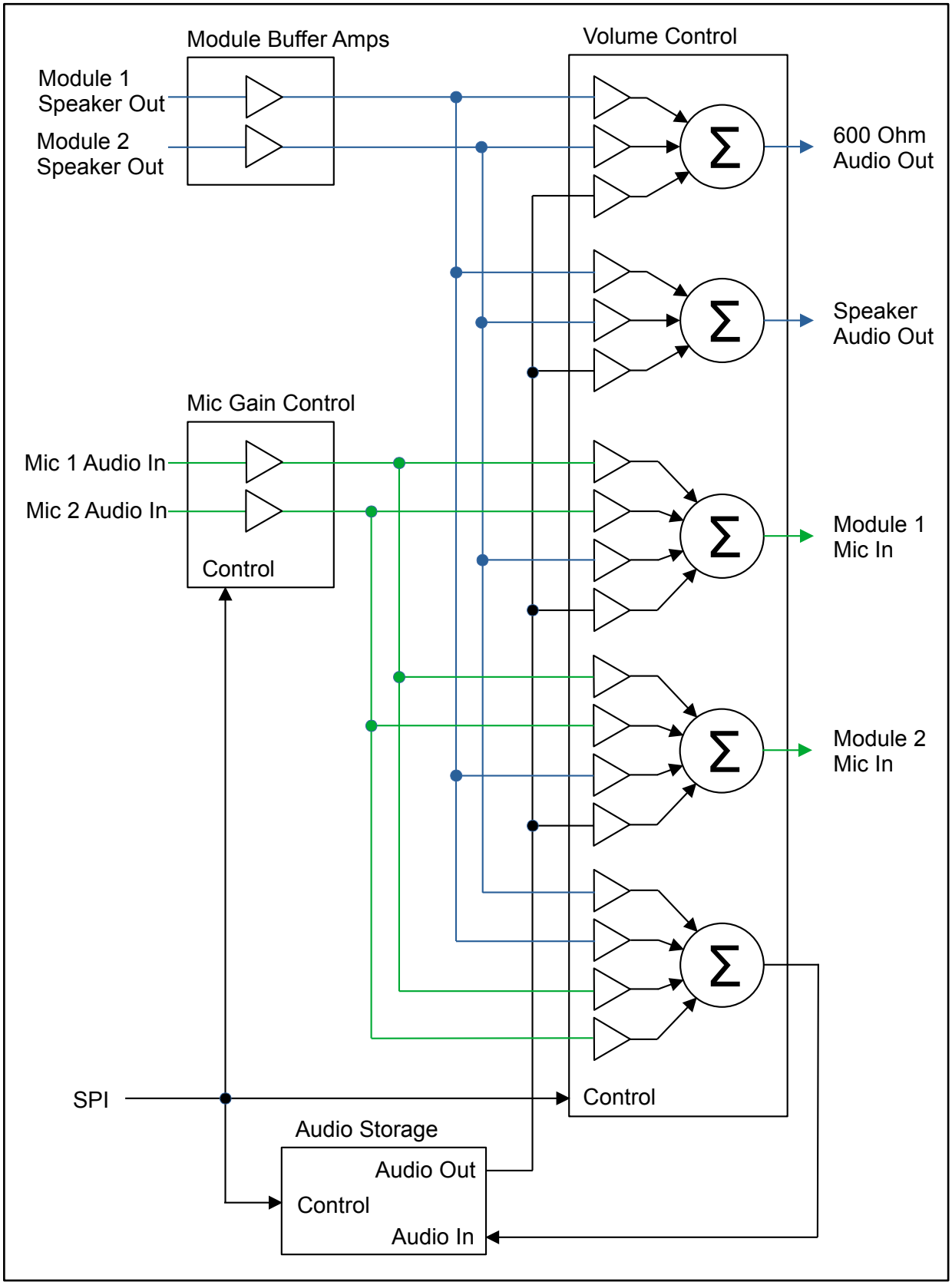

Figure 1.4 Audio Card Block Diagram

MODULE A3 – RF CARRIER BOARD

The TDFM-136B, digital VHF/FM transceiver has a transmitter section with a minimum of 8 watts and does not exceed 10 watts output power, which may be reduced by a Front Panel switch to 1 watt, in order to reduce interference to land based systems. A block diagram of the main RF assembly is shown in figure 1.4 below.

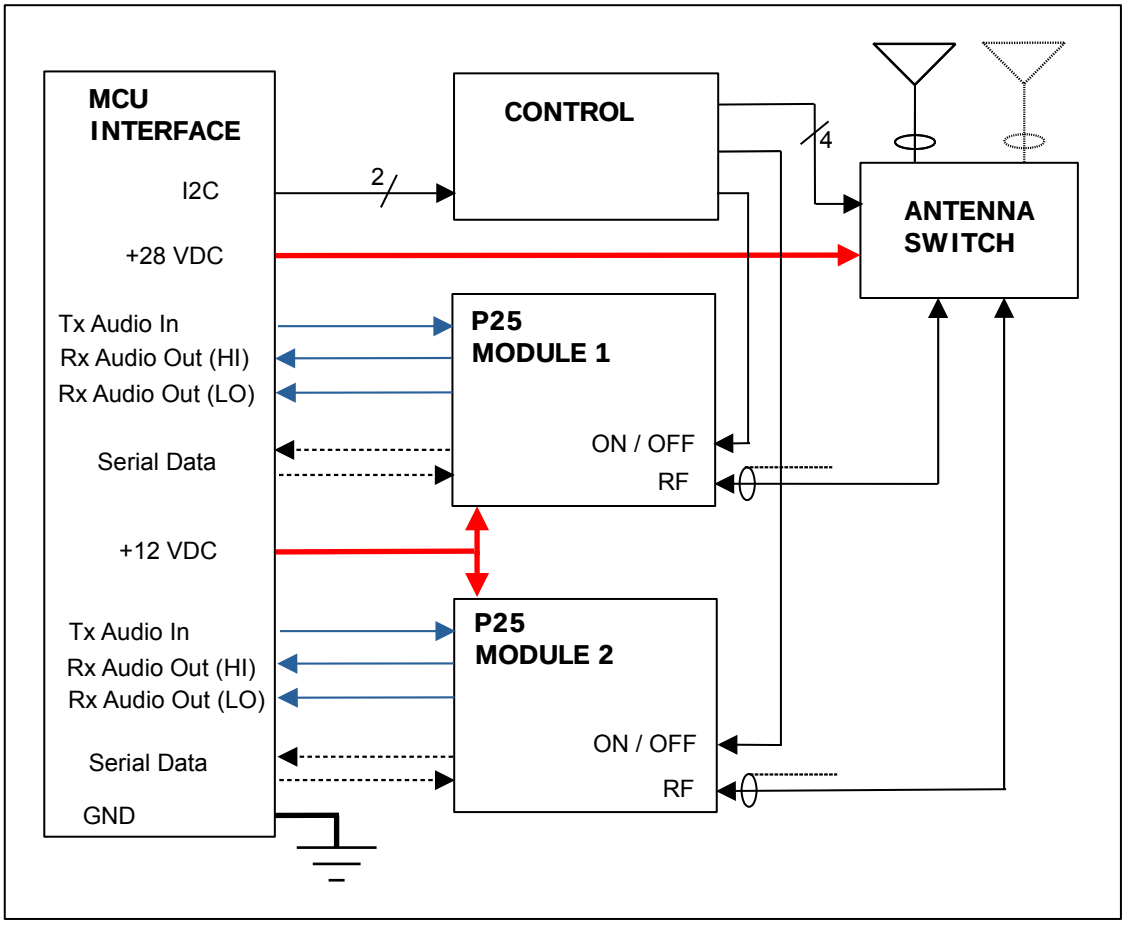

Figure 1.5 The Main RF Module Block Diagram

The carrier board utilizes RF modules from nexus wireless inc, and marries them to a receive signal splitter and associated antenna switching circuitry. The P25 modules interface with the carrier board via a 120 pin rigid connector that carries power, control, and baseband audio signals, and a RF coaxial antenna cable. The antenna switching circuitry allows the two modules to be operated with either two separate antennas or one shared antenna.

A3 - The P25 RF Modules

The P25 functionality is achieved by using two nexus wireless XR25-VP RF modules. Control of the P25 modules is via serial communications and one control line (on/off). Audio into each module is via a single line, and audio out is balanced in the form of audio out (HI) and audio out (LO). The power into the P25 module is +12Vdc.

A3 - Rx/Tx Antenna Switch And Control Circuit

The antenna switch is used to change the RF path between transmit and receive operation. This

ensures that high power transmit signals do not damage the receive circuit of the P25 RF modules. If the radio is operating with dual antennas, the switches are set to connect one antenna to each module during system startup and no further changes are made during operation. If the radio is operating with a single shared antenna, then the switch configuration will change depending on the operating state of the radio. When the radio is in receive mode, the three transmit switches are opened and the three receive switches are closed. This places a signal splitter into the receive path, along with a RF amplifier that compensates for losses in the RF switch network. When the radio is in transmit mode, the three Rx switches are opened and one of the Tx switches is closed. Which Tx switch is closed will depend on whether the radio is transmitting on the main or guard channel.

MODULE A4 – FRONT PANEL ASSEMBLY

The Front Panel Assembly Comprises Three Boards:
The Display Board
The Keypad Board
The Front Panel Board

The Front Panel Block Diagram Is Shown In Figure 1.6 Below.

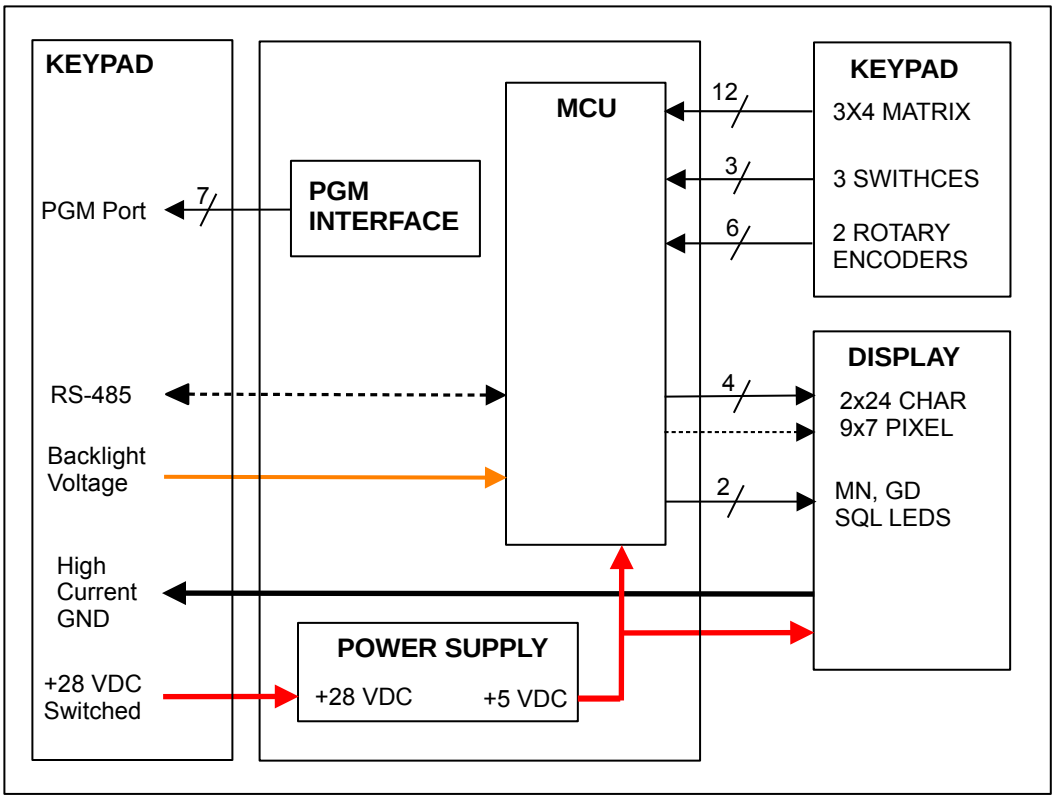

Figure 1.6 The Front Panel Assembly Block Diagram

A4 – Front Panel Display Board

The Front Panel display board includes three (3) of the avago hcms-292x series led character display modules, with each module having 2x8 characters for a total of 2x24 characters. In addition, the display board holds the two (2) receive active led.. The display modules are accessed via the spi which provides the display bitmap data via the 'data1' and 'clock' lines. Module control is provided by the 'rs', 'ce*', 'blank' and 'reset*' lines. The display is powered by the separate 5vdc led power supply.

A4 – Front Panel Keypad board

The Front Panel keypad board provides a 3x4 key matrix, two rotary encoders, and display backlight led's. Each push-button is in the normally open configuration. The rotary encoders primarily act as the volume controls for the received audio, but can be reconfigured under software control to provide advanced editing capabilities.

A4 – Front Panel MCU board

The Front Panel MCU board is the mounting point for the other boards in the module. It is connected to the keypad board via a 26 pin connector and swagged in stand-offs, and to the display board via 10 and 3 pin connectors. The Front Panel board contains the following electrical circuits:

Front Panel power supply: the power supply resides on the Front Panel board and is a switch mode regulator that accepts 28V input and generates dual 5v outputs. One 5v output is the logic supply for the Front Panel circuits, while the other supplies the led display modules. This separate output keeps noise induced by the high currents used in the led display module from interfering with the rest of the system.

Front Panel MCU: the Front Panel MCU is a freescale MC689S12XEQ512. This MCU is a variant of the MC689S12XEP100 MCU used on the main MCU board. It has less internal memory and less i/o (due to the smaller physical package) but is otherwise identical to the main MCU. It runs on a clock derived from an external 3.6864 mhz. Crystal, and has a background debug module (bdm) that is routed out to a connector to allow programming and debugging of the system. The serial peripheral interface (SPI) is used to send data to the display board. The serial communications interface (sci) is set up such that one channel talks to the main MCU via the RS-485 interface, while the other is unused. The analog to digital converter is used to measure the panel lighting voltage. There are two measuring circuits, one scaled for 28V lighting and one scaled for 5v lighting. Which input actually controls the panel backlighting is selectable in software.

Display interface: the display interface provides capacitor filtering for the all signals. As well, pulllup resistors are used on each of the control lines to the display board. Also, transistor drivers for the squelch indicator led's are shown in this circuit.

Keypad & switch interface: the keypad and switch lines are fed to I/O ports on the Front Panel MCU the keypad is a 3 x 4 matrix, and there are 3 discrete switches and two push-buttons for a total of 17 contacts to be handled. Each input line is pulled high by an pullup resistor inside the MCU, and the line is considered 'active' when it is pulled low. The Front Panel rotary encoders output bi-phase signals that permit the MCU to determine the speed and direction of rotation of each encoder. In addition, each encoder has a push-button action that can be used by the software to provide a “select” functionality. In addition to its normal functions, the main encoder also provides a signal back to the main power switch for the radio. This signal allows the user to turn on the radio by pressing the main encoder button.

SECTION 2

DISASSEMBLY / ASSEMBLY

This section describes disassembly and re-assembly of the transceiver to allow trouble shooting and board level replacement service. The following equipment is needed:

Screwdrivers: Philips, Flat, 1/16” Hex, 3/32” Hex.
Nut driver: 3/16” Hex
Needle nose pliers

The following abbreviations are used:

Screw Head & Drive:
PP – Panhead Philips
FP – Flathead Philips

Fastener Material/Finish:
SS – Stainless steel
BO – Black Oxide

2.1 TRANSCEIVER DISASSEMBLY

This section describes steps to fully disassemble the TDFM-136B transceiver into its component parts down to the board level. Use static sensitive precautions when handling the transceiver.

REMOVING THE LIDS

Remove the Top and Bottom covers. For each cover remove seven screws (4-40, 3/16”, FP, SS), three from the top and two from each side. See Figure 2.1.

FIGURE 2-1: The Cover screw locations

REMOVING THE NEXUS RF MODULES

Remove the Nexus RF modules from the transceiver following the steps shown below:

1) Remove all the Thermal Gap Filler Pads from the RF modules as shown in figure 2-2 below. There are 3 pieces per module: one large piece on top and two smaller under that for each module.

FIGURE 2-2: Thermal pads on RF modules

2) Disconnect the three RF coaxial cables, one from each RF Module and one on the Carrier Board from the Antenna Connector. Using needle nose pliers, grab the neck of the connector and pull away from the socket.

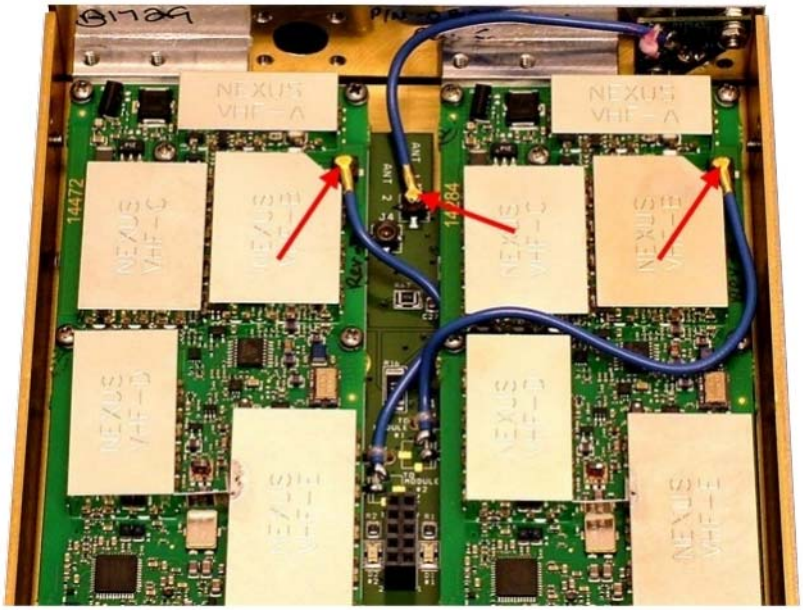

FIGURE 2-3: RF coax cable connector locations

3) Remove seven screws (2-56, 1/4", PP, S/S) and associated washers from each RF Module at the locations shown in figure 2-4 below.

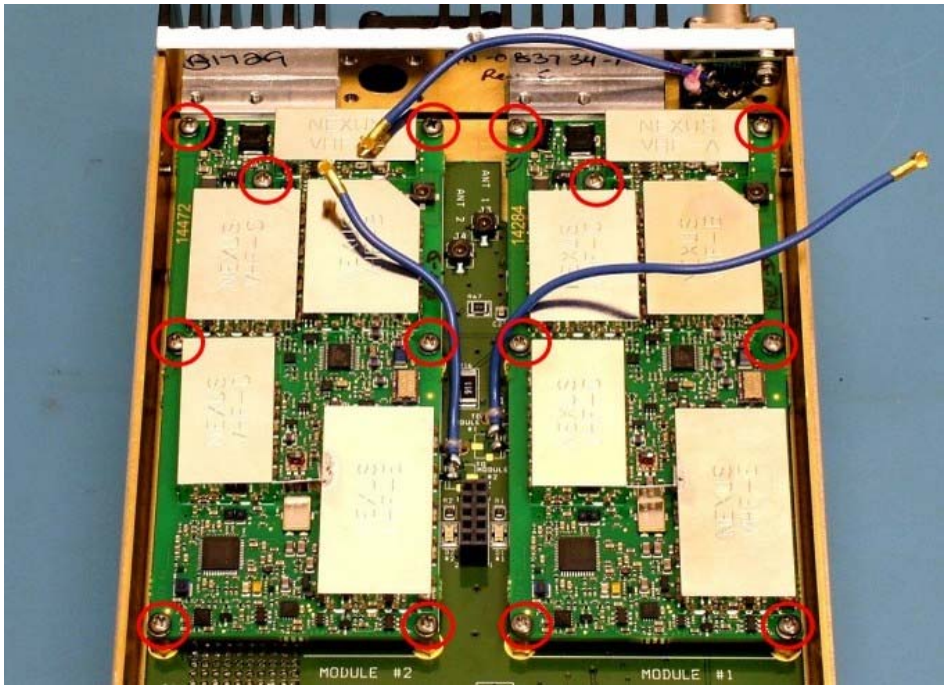

FIGURE 2-4: The RF module mounting screw locations

4) Gently pull up the front of the module until the connector (hidden under the module) disengages, then carefully remove the module from the carrier board. Do not pull on the RF shields as they are press fit only. After module removal, the carrier board is exposed as seen in figure 2-5.

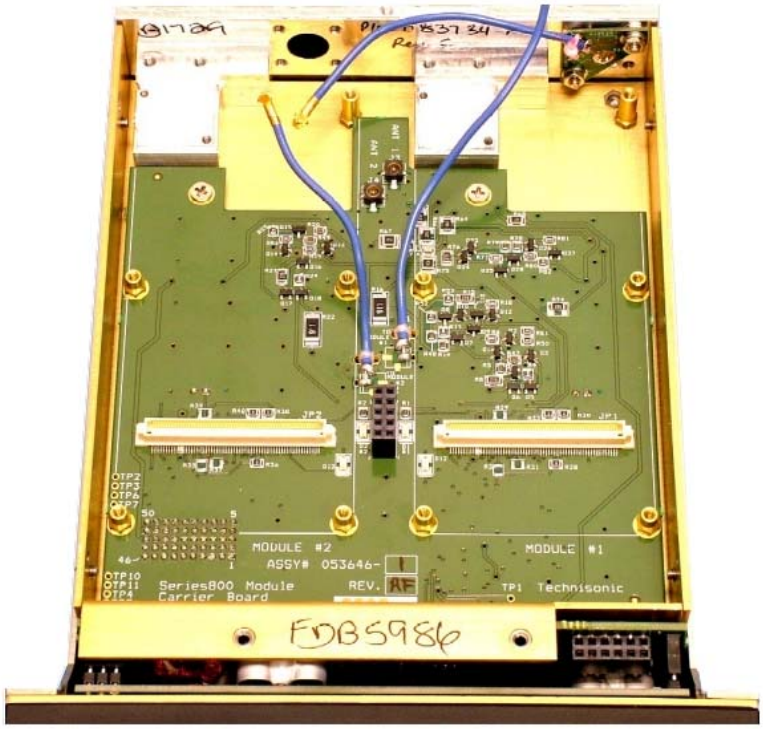

FIGURE 2-5: The carrier board with RF modules removed

REMOVING THE CARRIER BOARD

1) Remove the eight brass standoffs and two screws (4-40, 1/4", FP, SS) that are used to secure the carrier board to the chassis, see figure 2-6. Use the 3/16" nut driver for the standoffs.

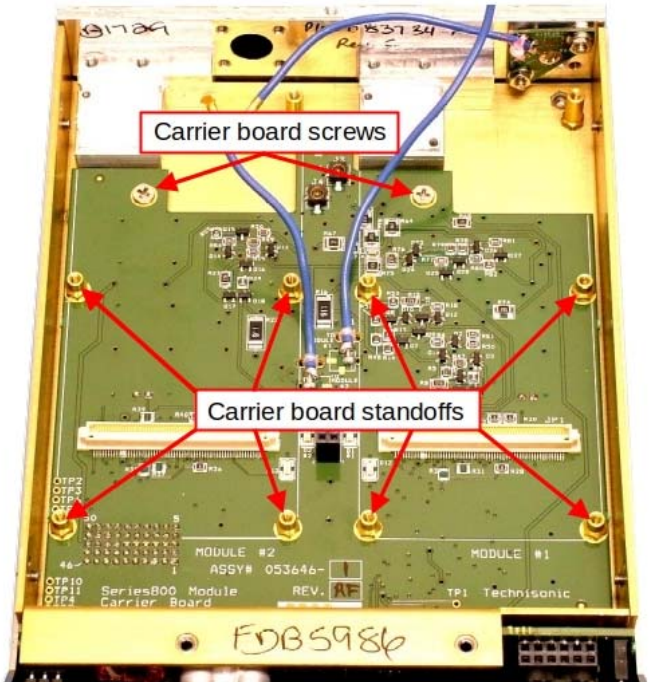

FIGURE 2-6: Carrier board standoff & screw locations

2) Loosen the two side screws at the front of the chassis top allow the board to clear. Pull thecarrier board loose from the J5 connector (5x10 pin) at the front left.

FIGURE 2-7: Interfering chassis screw locations

2) Remove the RF module carrier board from the top tray of the chassis as shown in figure 28.

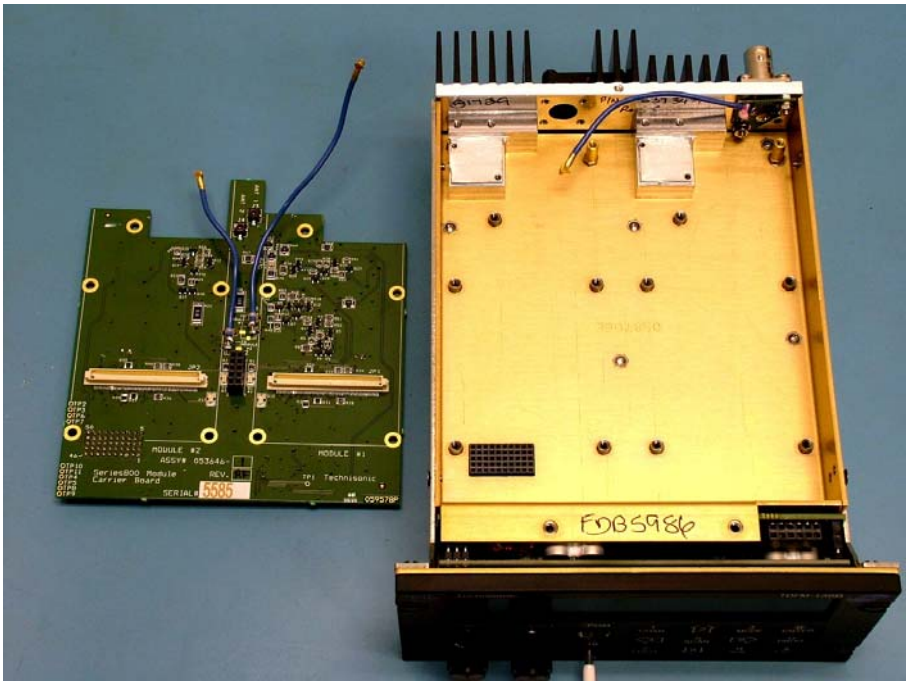

FIGURE 2-8: Carrier board removed

REMOVING THE BOTTOM TRAY

Turn the unit over, remove screws (4-40, 3/16”, FP, SS) as shown in figure 2-9, remove tray.

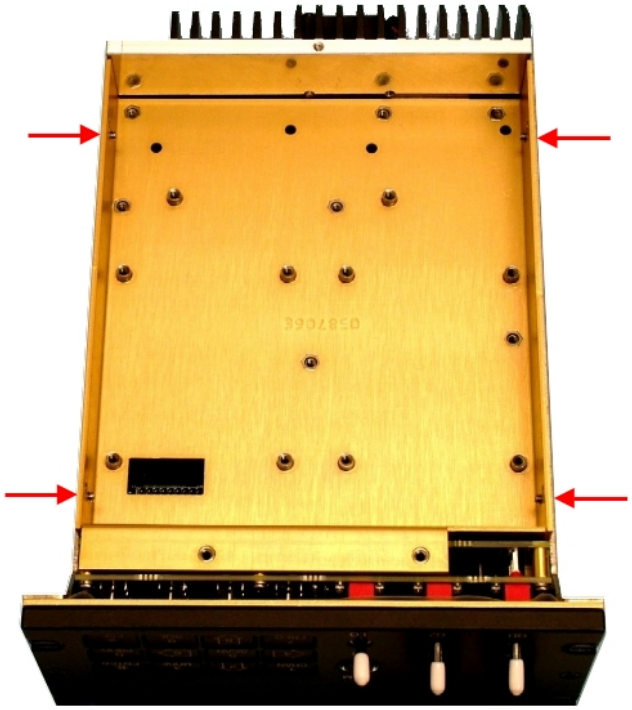

FIGURE 2-9: Bottom tray securing screw locations

REMOVING THE FRONT PANEL ASSEMBLY

Note: this operation can happen at any time *prior* to this in the sequence as it does not impact and is not impacted by those other operations.

1) To remove the Front Panel Assembly, remove a total of eight screws (4-40, 3/16", FP, SS) from the transceiver: four from each side, two from the back of the Front Panel and two from the side panels as indicated in figure 2-10 below.

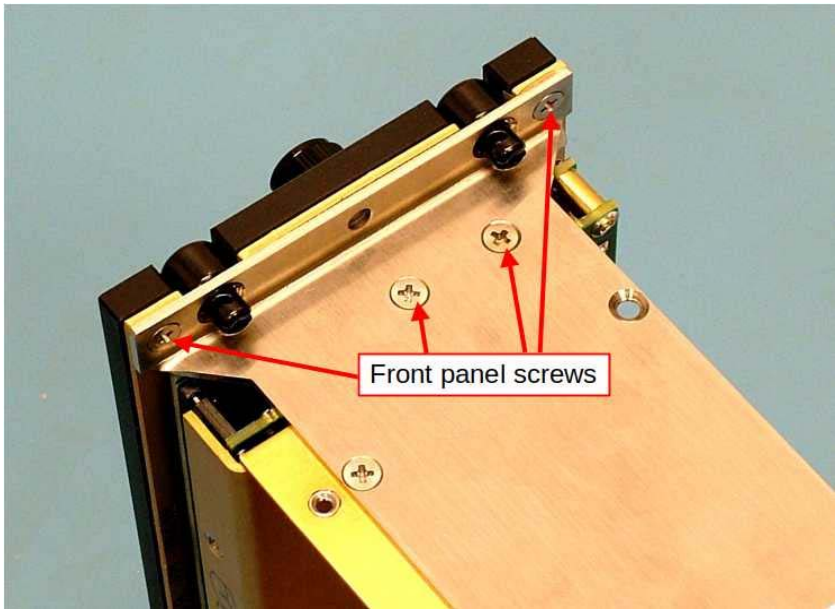

FIGURE 2-10: Front Panel screw locations

2) Carefully pull the Front Panel Assembly away from the radio chassis. (Figure 2-11)

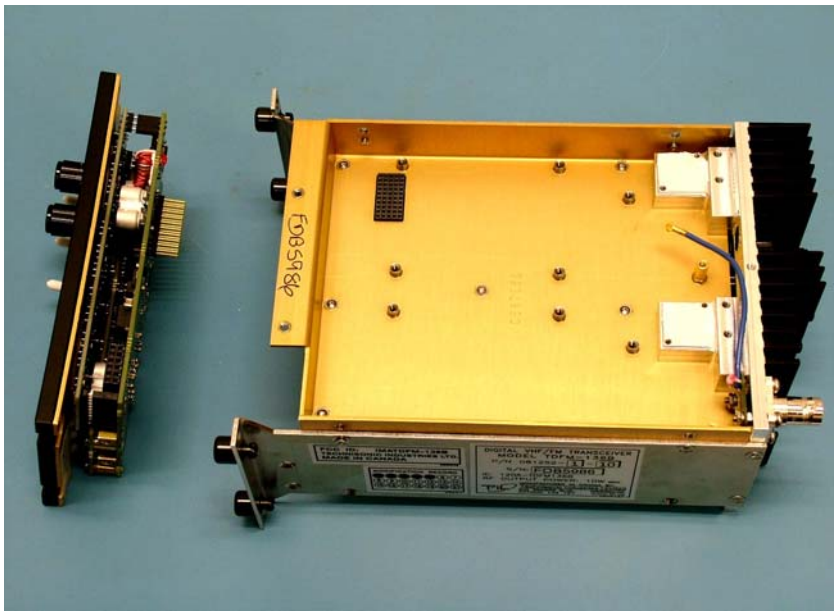

FIGURE 2-11: The Front Panel Assembly removed

REMOVING THE ANALOG AUDIO BOARD

1) Remove the four screws (4-40, 1/4", PP, SS), and the associated split washers securing the analog audio board. Gently pull the board up and away from the MCU board.

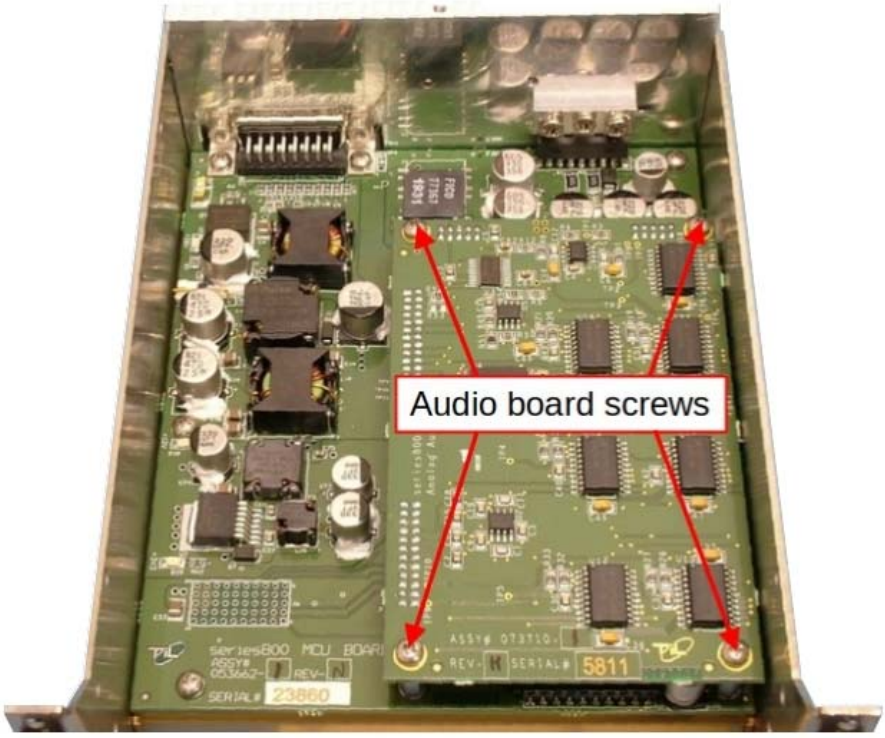

FIGURE 2-12: Analog Audio board screw locations

REMOVING THE MCU BOARD

The MCU board is secured to the chassis on both the rear heat sink and the tray surfaces using a variety of hardware. Refer to figure 2-13 below when following the steps listed here:

1) Remove the heatsink jack screws. From the outside of the unit using a 1/4" nut driver remove the two jack screws, and associated split washers, securing the MCU via the DB-15 connector. See "Heatsink jack screws" in figure 2-13 below.

2) Remove the heatsink audio amp screws. From the inside of the unit remove the three (4-40, 7/16", PP, SS), and associated split washers from the tab of the audio amplifier block. Remove the small heatsink block between the amplifier tab and the main rear heatsink as well. See "Heatsink amp screws" in figure 2-13 below.

3) Remove the tray screws. Remove six screws (4-40, 1/4", PP, SS), and associated split washers from the MCU, two through the DB-15 connector and four through the PCB only. See "Tray screws" in figure 2-13 below.

4) Remove the tray standoffs. Remove four male/female standoffs (4-40, 1/2", Hex, 3/16", Aluminium). See "Tray standoffs" in figure 2-13 below.

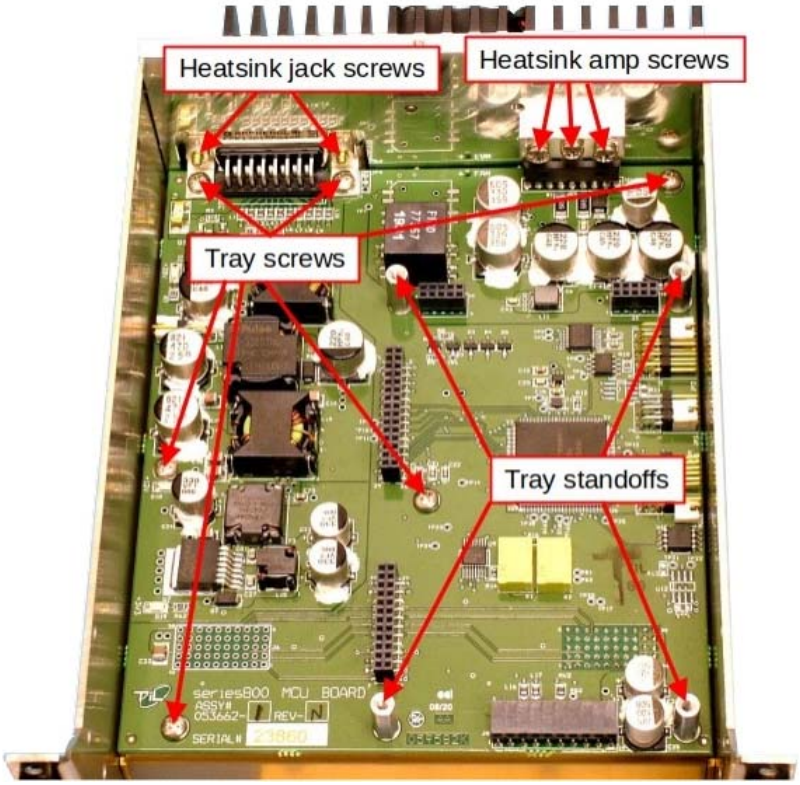

FIGURE 2-13: MCU board fastener locations

5) Gently lift and pull the MCU board forward to expose the heatsink fan connector. Unplug the fan connector, then remove the MCU board from the chassis. See figure 2-14 below.

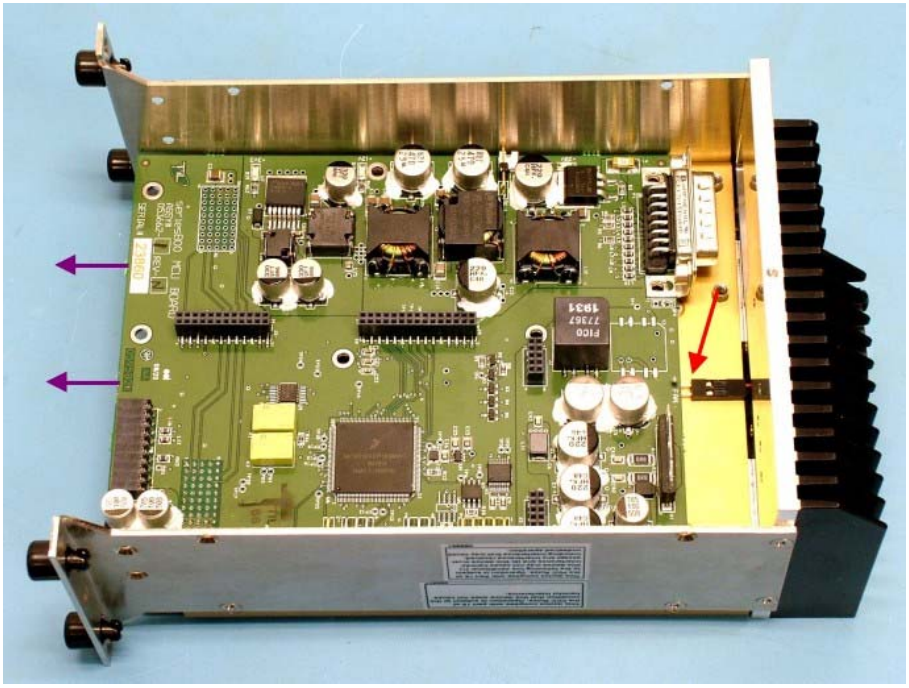

FIGURE 2-14: Disconnecting the heatsink fan connector

REMOVING THE HEAT SINK ASSEMBLY

1) Remove the side panel/heatsink screws. Remove two screws (4-40 , 1/4", FP, SS) from each side panel into the heatsink. See figure 2-15 below.

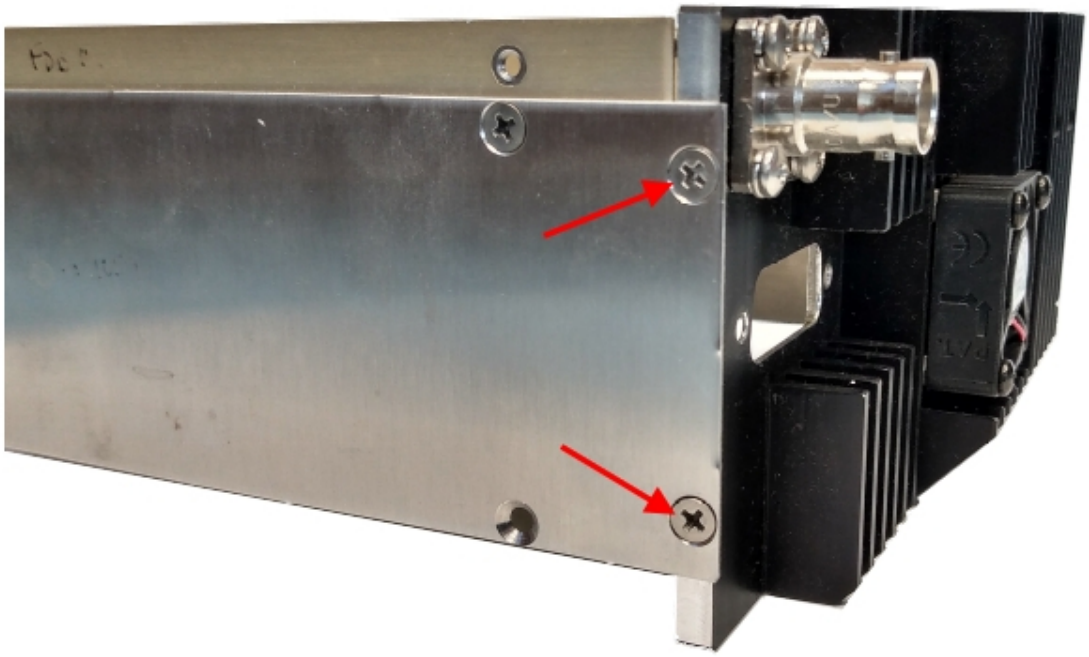

FIGURE 2-15: Side panel to rear heatsink screw locations

2) Remove four screws (4-40, 5/16" Hex head, BO) securing the RF heat sinks in the tray to the main heatsink, see figure 2-16 below.

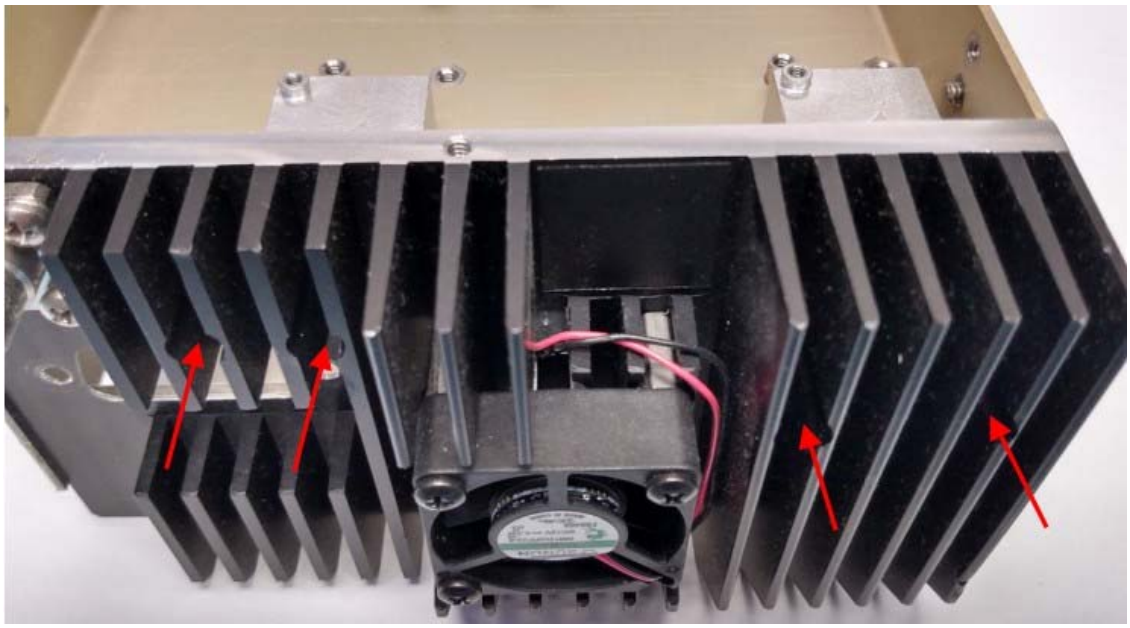

FIGURE 2-16: Rear heatsink to RF heatsink block screw locations

REMOVING THE HEAT SINK FAN

Remove the 3 screws (4-40, 9/16”, PP, BO) holding the Heat Sink Fan. Pull the fan away from the heatsink slowly, feed the power connector through the hole in the heatsink. See figure 2-17 below.

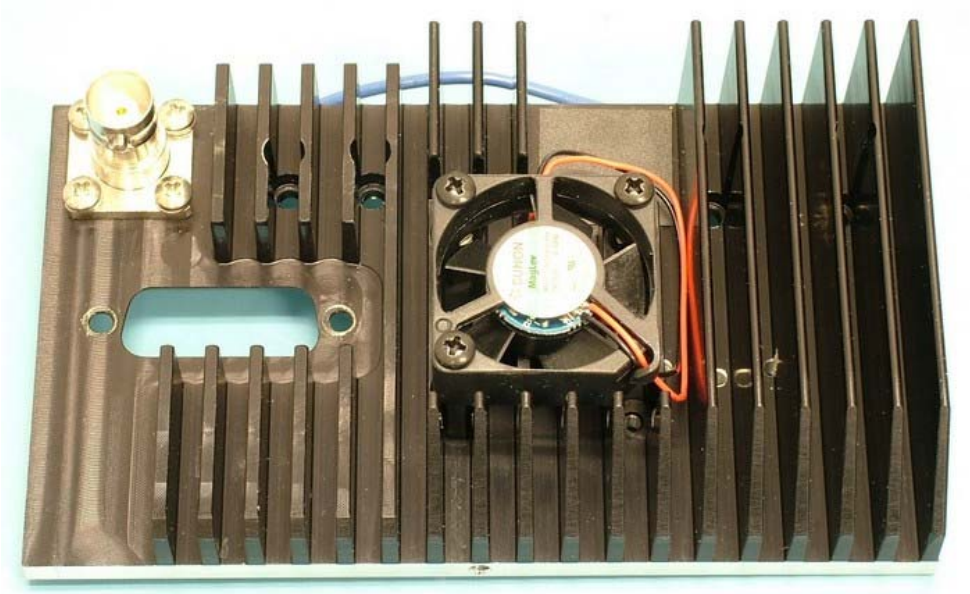

FIGURE 2-17: Rear heatsink fan screw locations.

REPLACING THE ANTENNA CONNECTOR ASSEMBLY

To replace the antenna connector assembly remove two # 2 nuts and de-solder the antenna connector board from the BNC center pin. See figure 2-18 below.

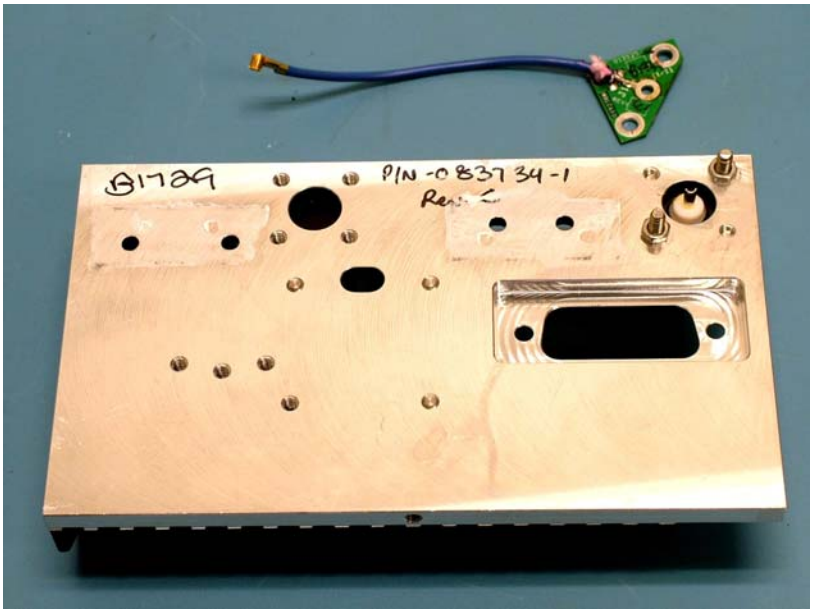

FIGURE 2-18: Rear heatsink with Antenna connector board removed.

FRONT PANEL DISASSEMBLY

Follow the steps described here to disassemble the Front Panel assembly.

1) Remove both Main and Guard Knobs. Use a 1/16" Hex driver to loosen each of the knob set screws (two per knob), then remove the knobs from the encoder shafts. See figure 2-19 below.

2) Remove two screws (4-40 x 1/4", FP, BO) from the sides of the Front Panel plastic face plate, see figure 2-19 below.

FIGURE 2-19: Front Panel knob and screw locations.

3) Place all three switches in the down position, hold the Front Panel assembly face down (so not to lose either the buttons or the lens frame components) and gently fold back the metal assembly away from the plastic face plate. Figure 2-20 below shows the results.

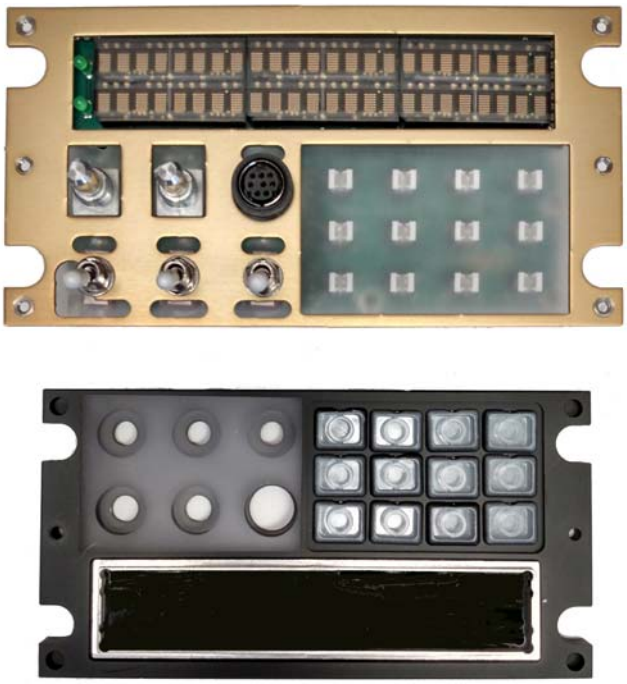

FIGURE 2-20: Front Panel face plate removed

4) Remove the three 5/16” nuts and washers on the switches and then remove the Front Panel metal plate, see figure 2-21 below.

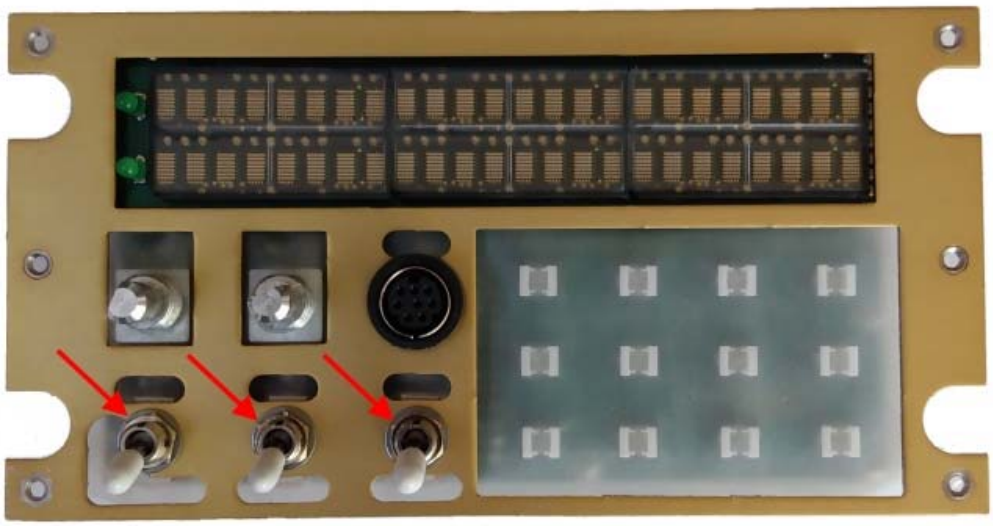

FIGURE 2-21: Front Panel metal plate switch fastener locations.

5) Remove the plastic film that covers the user control surfaces.

6) To remove the Display board, pull it up at the locations indicated in Figure2-22, below.

7) To remove the Keypad board, remove five screws (2-56, 1/4”, PP, SS) and associated lock washers. Gently pull the Front Panel Keyboard away from the Front Panel MCU Board.

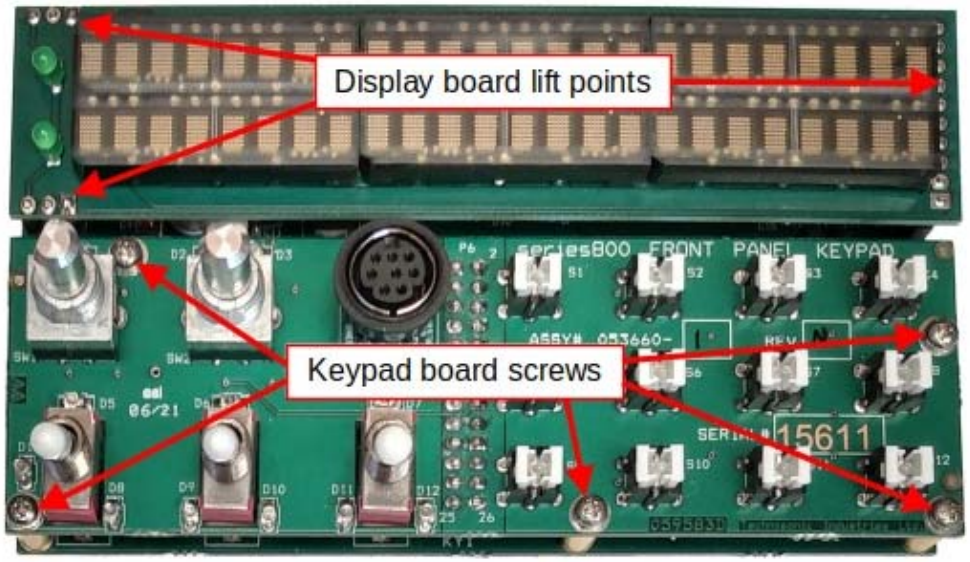

FIGURE 2-22: Display board lift points and keypad board fastener locations.

Figure 2-23: Front Panel PCB Components Disassembled

8) To change any display lens component remove, in the following order:

1) the lens frame;
2) the ESD screen;
3) the lens,

as shown in figure 2-24 below. Note the order for re-assembly. Change components as needed.

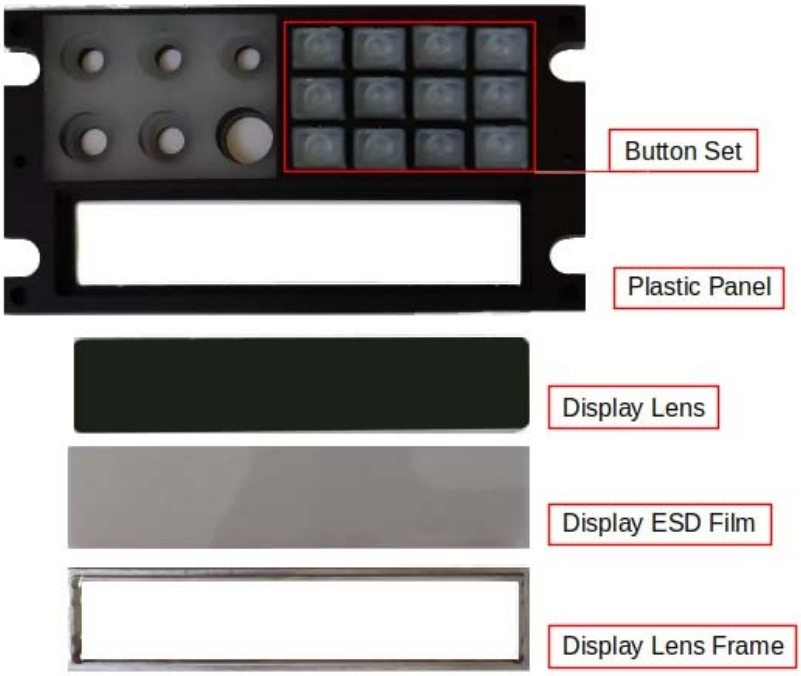

Figure 2-24: Display Lens Components Disassembled

2.2 TRANSCEIVER ASSEMBLY

To assemble the transceiver reverse the procedures in the sections above, starting with the Front Panel assembly and work back to the start.

Use care when connecting boards with pin-headers, be sure to correctly align all pins before pressing the boards together as the pins are easily bent if mis-aligned.

2.3 RETURNING THE TRANSCEIVER TO SERVICE

Anytime that the transceiver has been opened for service, that unit must be returned to service in accordance to factory procedures. Perform a final alignment of the transceiver and perform a final test to returne the transceiver to service. See table 2-1 for the required documents.

Table 2-1 TDFM-136B Return to service test documents

Description	Number
TDFM-136B FINAL TEST PROCEDURE	086470
TDFM-136B FINAL TEST DATA SHEET	086469

SECTION 3

SCHEMATIC DIAGRAMS

This section provides the schematic diagrams for the TiL designed PCB's in the transceiver.

There are eight schematic diagrams used in the design of the TDFM-136B, and these are shown in table 3-1 below.

Table 3-1 TDFM-136B Component Part Numbers – Schematics Highlighted.

Description	Assembly Number	**Schematic Number**	PCB Number	Parts List Number
Front Panel – DISPLAY Board	983371-3	**985351**	989992	982500-3
Front Panel - KEY PAD Board	053660-1	**055551**	059583	052857-1
Front Panel - MCU Board	053645-1	**055547**	059580	052853-1
Front Panel - DIN RISER Board	053673-1	**035501**	059614	052885-1
MAIN MCU Board	053662-1	**055548**	059582	052873-1
AUDIO Board – (ORIGINAL)	073710-1 H	**075588 F**	079771 F	072987-1 J
AUDIO Board – (NEW)	073710-1 L	**075588 G**	079771 G	072987-1 M
RF MODULE CARRIER Board	053646-1	**055545**	059578	062908-1
ANTENNA CONNECTOR Board	013525-2	**015458**	019238	012699-2

Note: The audio board was re-designed to deal with component shortages, the 'new' board is the same as the 'original' board but realized using different (available) components. There is no performance difference between the two boards. The revisions shown provide the last revision of the 'original' series and the first revision of the 'new' series.

3.1 FRONT PANEL DISPLAY SCHEMATIC

THIS DRAWING CONTAINS DESIGN AND OTHER INFORMATION WHICH ARE THE PROPERTY OF TECHNISONIC INDUSTRIES LIMITED. EXCEPT FOR RIGHTS EXPRESSLY GRANTED BY CONTRACT TO THE CANADIAN OR UNITED STATES GOVERNMENT THIS DRAWING MAY NOT, IN WHOLE OR IN PART, BE DUPLICATED OR DISCLOSED OR USED FOR MANUFACTURE OF PART DISCLOSED HEREIN, WITHOUT THE PRIOR WRITTEN PERMISSION OF:

TECHNISONIC INDUSTRIES LIMITED.

REVISIONS

LTR	DESCRIPTION	DATE	APPR.

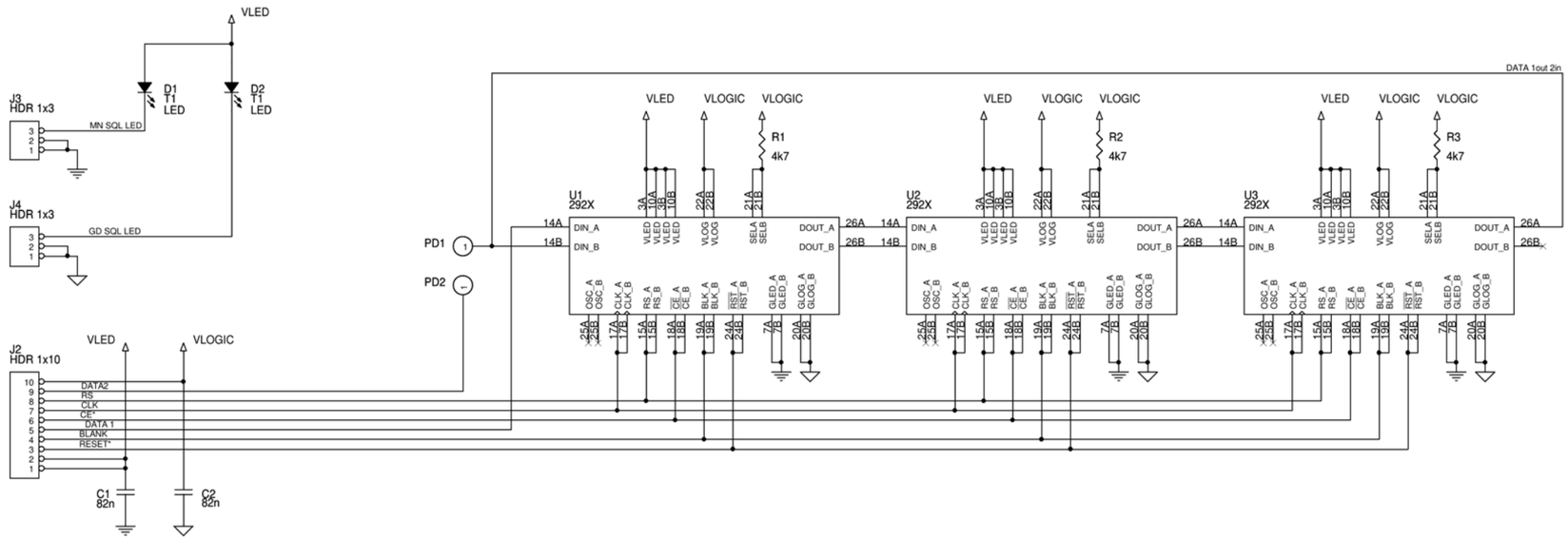

HIGHEST DESIGNATION(S) USED

DESIGNATION(S) NOT USED

Tolerances:
ALL DIMENSIONS ARE IN INCHES
UNLESS SPECIFIED OTHERWISE STATED
#.# ----------> ± 0.1
#.## ----------> ± 0.01
#.### ----------> ± 0.001
ANGLES ----> 0.5°
HOLE DIA. --> ±0.003

Application / Used On:
ASSEMBLY 983371-1

Date: Thursday, October 15, 1998
Drawn: A. MacDonald
Date:
Approved:

Technisonic Industries Ltd.
250 Watline Ave.
Mississauga, Ontario L4Z 1P4

TITLE: TDFM-136: Display Board

Size:	Cage Code:	DWG #:	REV:
B	38546	985351	-

Scale: | Print: Tuesday, April 12, 2005 | Page: 1 of 1

3.2 FRONT PANEL KEYPAD SCHEMATIC

NOTES:

24 SEP 08 - All non-project specific names change to 'series800'.

THIS DRAWING CONTAINS DESIGN AND OTHER INFORMATION WHICH ARE THE PROPERTY OF TECHNISONIC INDUSTRIES LIMITED. EXCEPT FOR RIGHTS EXPRESSLY GRANTED BY CONTRACT TO THE CANADIAN OR UNITED STATES GOVERNMENT THIS DRAWING MAY NOT, IN WHOLE OR IN PART, BE DUPLICATED OR DISCLOSED OR USED FOR MANUFACTURE OF PART DISCLOSED HEREIN, WITHOUT THE PRIOR WRITTEN PERMISSION OF:

TECHNISONIC INDUSTRIES LIMITED.

REVISIONS

LTR	DESCRIPTION	DATE
A	Power Supply, Serial Num Chip. (see CR06746)	MAR 06
B	Add extra LED & resistor (R25, D13). (see CR 08302)	NOV 07
C	Great Name Change (CR 08319)	24 SEP 08
D	Change keypad backlight R values (CR 11360)	20 JUL 11
E	Add ESD protection to any line to MCU (CR12853)	20 SEP 12

Mounting Holes

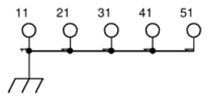

MiniDIN8 Mounting

DIN 8 Riser board signal pins are soldered to FP keypad board for mechanical support only, signal pins continue to FP MCU. Ground pin is soldered for ESD handling and clipped so that GND signal DOES NOT go to FP MCU board.

Note that pin 5 in this footprint corresponds to pin 1 which is ground on the DIN8 riser.

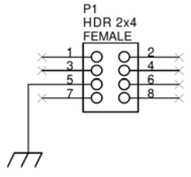

DIN8 Port

Fiducial

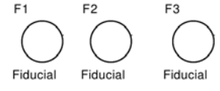

Kludge to allow solderable pads to be placed on Encoder footprint.

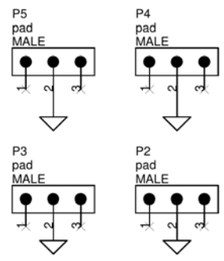

Date:	Tuesday, April 18, 2006
Drawn:	Andrew MacDonald

Related Documents

PCB	059583
P/L	052857
ASSY	053660-1

Technisonic Industries Ltd.
240 Traders Blvd.
Mississauga, Ontario L4Z 1W7

TITLE: series800 Front Panel Keypad

Size:	Cage Code:	DWG #:	REV:
B	38546	055551	E

Scale: | Print: Thursday, October 25, 2012 | Page: 1 of 2

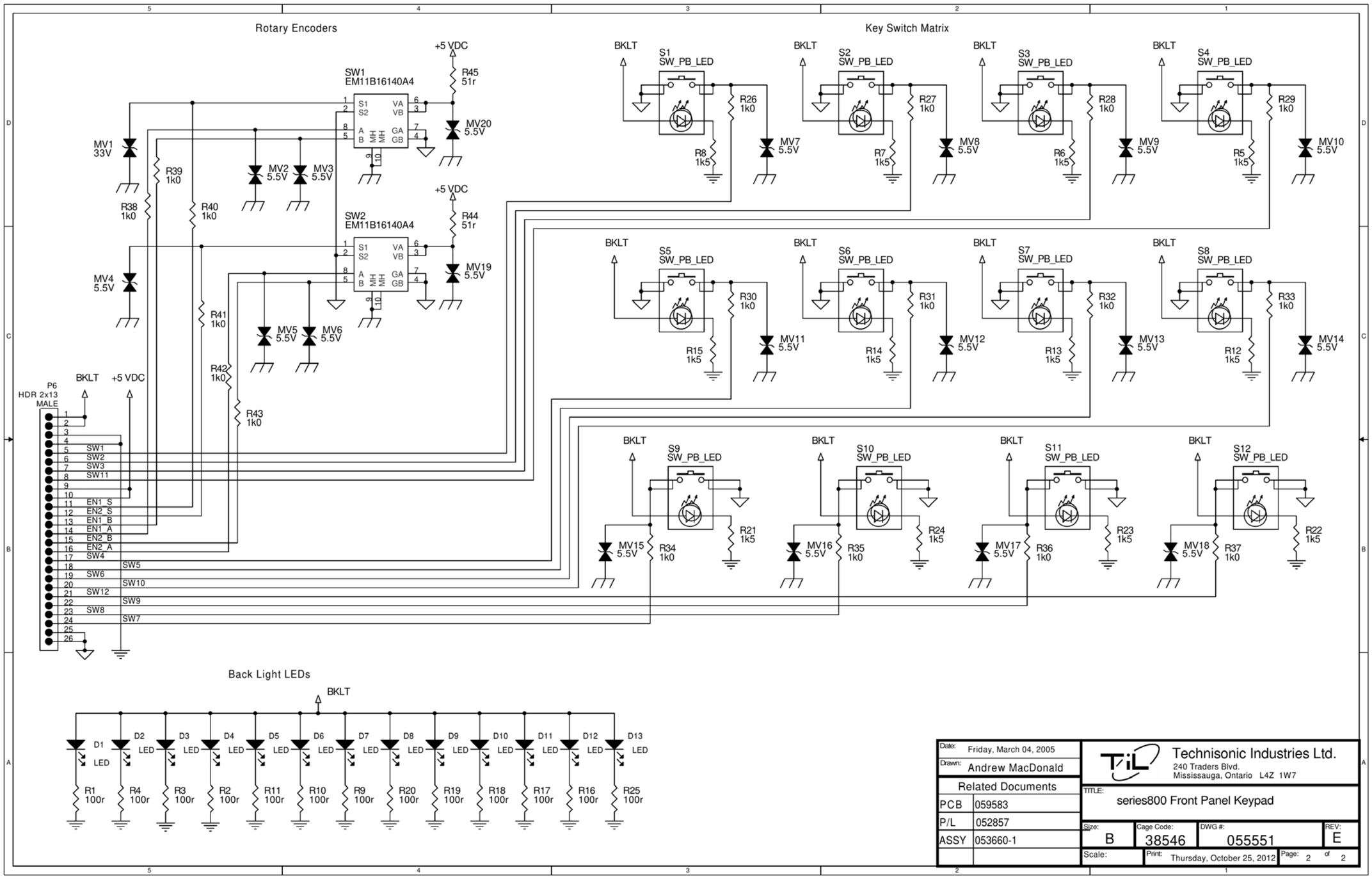
Rotary Encoders
Key Switch Matrix
+5 VDC
SW1
EM11B16140A4
SW2
EM11B16140A4
R45 51r
R44 51r
MV1 33V
MV2 5.5V
MV3 5.5V
MV4 5.5V
MV5 5.5V
MV6 5.5V
MV19 5.5V
MV20 5.5V
R38 1k0
R39 1k0
R40 1k0
R41 1k0
R42 1k0
R43 1k0
P6
HDR 2x13
MALE
BKLT
SW1
SW2
SW3
SW11
EN1_S
EN2_S
EN1_B
EN1_A
EN2_B
EN2_A
SW4
SW5
SW6
SW10
SW12
SW9
SW8
SW7
S1 SW_PB_LED
S2 SW_PB_LED
S3 SW_PB_LED
S4 SW_PB_LED
S5 SW_PB_LED
S6 SW_PB_LED
S7 SW_PB_LED
S8 SW_PB_LED
S9 SW_PB_LED
S10 SW_PB_LED
S11 SW_PB_LED
S12 SW_PB_LED
R26 1k0
R27 1k0
R28 1k0
R29 1k0
R30 1k0
R31 1k0
R32 1k0
R33 1k0
R21 1k5
R24 1k5
R23 1k5
R22 1k5
R8 1k5
R7 1k5
R6 1k5
R5 1k5
R15 1k5
R14 1k5
R13 1k5
R12 1k5
R34 1k0
R35 1k0
R36 1k0
R37 1k0
MV7 5.5V
MV8 5.5V
MV9 5.5V
MV10 5.5V
MV11 5.5V
MV12 5.5V
MV13 5.5V
MV14 5.5V
MV15 5.5V
MV16 5.5V
MV17 5.5V
MV18 5.5V
Back Light LEDs
D1 LED
D2 LED
D3 LED
D4 LED
D5 LED
D6 LED
D7 LED
D8 LED
D9 LED
D10 LED
D11 LED
D12 LED
D13 LED
R1 100r
R4 100r
R3 100r
R2 100r
R11 100r
R10 100r
R9 100r
R20 100r
R19 100r
R18 100r
R17 100r
R16 100r
R25 100r
Date: Friday, March 04, 2005
Drawn: Andrew MacDonald
Related Documents
PCB 059583
P/L 052857
ASSY 053660-1
Technisonic Industries Ltd.
240 Traders Blvd.
Mississauga, Ontario L4Z 1W7
TITLE: series800 Front Panel Keypad
Size: B
Cage Code: 38546
DWG #: 055551
REV: E
Scale:
Print: Thursday, October 25, 2012
Page: 2 of 2

3.3 FRONT PANEL MCU SCHEMATIC

NOTES:

24 SEP 08 - All non-project specific names change to 'series800' from TDFM-800 project wide.

THIS DRAWING CONTAINS DESIGN AND OTHER INFORMATION WHICH ARE THE PROPERTY OF TECHNISONIC INDUSTRIES LIMITED. EXCEPT FOR RIGHTS EXPRESSLY GRANTED BY CONTRACT TO THE CANADIAN OR UNITED STATES GOVERNMENT THIS DRAWING MAY NOT, IN WHOLE OR IN PART, BE DUPLICATED OR DISCLOSED OR USED FOR MANUFACTURE OF PART DISCLOSED HEREIN, WITHOUT THE PRIOR WRITTEN PERMISSION OF:

TECHNISONIC INDUSTRIES LIMITED.

REVISIONS

LTR	DESCRIPTION	DATE
A	Add separate power supply for Keyboard backlight,	APR 05
B	Power Supply, Serial Num chip. (see CR 06745)	MAR 06
C	Add power-hold out to Main MCU (see CR07121)	NOV 07
D	MCU protect cct, RS485 pull-ups (see CR07122)	NOV 07
E	Name change TDFM-800 to series800	24 SEP 08
F	Fix display problems (see CR 09933)	01 SEP 10
G	Fix D3 pinout (see CR 11378)	26 SEP 11
H	Add ESD protection to FP switch lines to MCU (see CR12853)	21 SEP 12

Mounting Holes

Connect all mounting holes to Earth (chassis) ground.

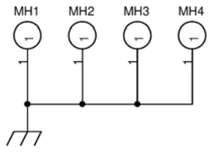

Earth Ground
. Common to all mounting points & standoffs.
. See 'Keypad' component for keypad standoff grounding details.
. Earth is the ground for all ESD devices.

Fiducial

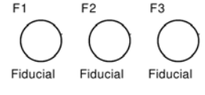

Fiducial as schematic component ensures that re-loading the netlist does not remove fiducials

Date:	Friday, October 15, 2004
Drawn:	A. MacDonald
Related Documents	
PCB	059580
P/L	052853
ASSY	053645-1

Technisonic Industries Ltd.
240 Traders Blvd.
Mississauga, Ontario L4Z 1W7

TITLE: series800 Front Panel MCU - Cover

Size:	Cage Code:	DWG #:	REV:
B	38546	055547	H

Scale: | Print: Monday, October 01, 2012 | Page: 1 of 4

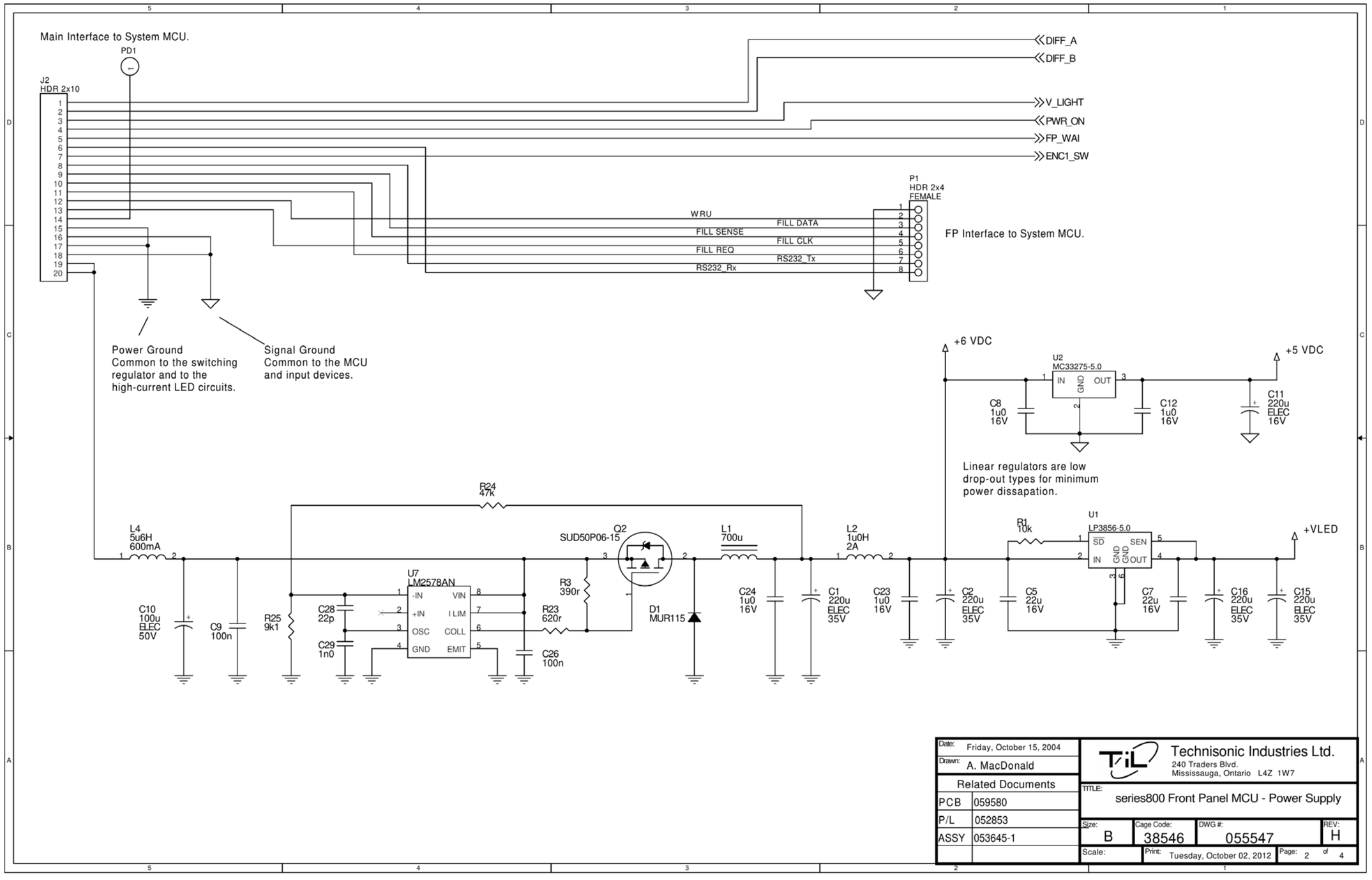
Main Interface to System MCU.
PD1
J2
HDR 2x10
DIFF_A
DIFF_B
V_LIGHT
PWR_ON
FP_WAI
ENC1_SW
P1
HDR 2x4
FEMALE
WRU
FILL SENSE
FILL REQ
RS232_Rx
FILL DATA
FILL CLK
RS232_Tx
FP Interface to System MCU.
Power Ground
Common to the switching
regulator and to the
high-current LED circuits.
Signal Ground
Common to the MCU
and input devices.
+6 VDC
U2
MC33275-5.0
IN
GND
OUT
+5 VDC
C8
1u0
16V
C12
1u0
16V
C11
220u
ELEC
16V
Linear regulators are low
drop-out types for minimum
power dissapation.
R24
47k
L4
5u6H
600mA
Q2
SUD50P06-15
L1
700u
L2
1u0H
2A
U1
LP3856-5.0
R1
10k
+VLED
U7
LM2578AN
-IN
+IN
OSC
GND
VIN
I LIM
COLL
EMIT
R3
390r
R23
620r
D1
MUR115
C10
100u
ELEC
50V
C9
100n
R25
9k1
C28
22p
C29
1n0
C26
100n
C24
1u0
16V
C1
220u
ELEC
35V
C23
1u0
16V
C2
220u
ELEC
35V
C5
22u
16V
C7
22u
16V
C16
220u
ELEC
35V
C15
220u
ELEC
35V
Date: Friday, October 15, 2004
Drawn: A. MacDonald
Related Documents
PCB 059580
P/L 052853
ASSY 053645-1
Technisonic Industries Ltd.
240 Traders Blvd.
Mississauga, Ontario L4Z 1W7
TITLE:
series800 Front Panel MCU - Power Supply
Size: B
Cage Code: 38546
DWG #: 055547
REV: H
Scale:
Print: Tuesday, October 02, 2012
Page: 2 of 4

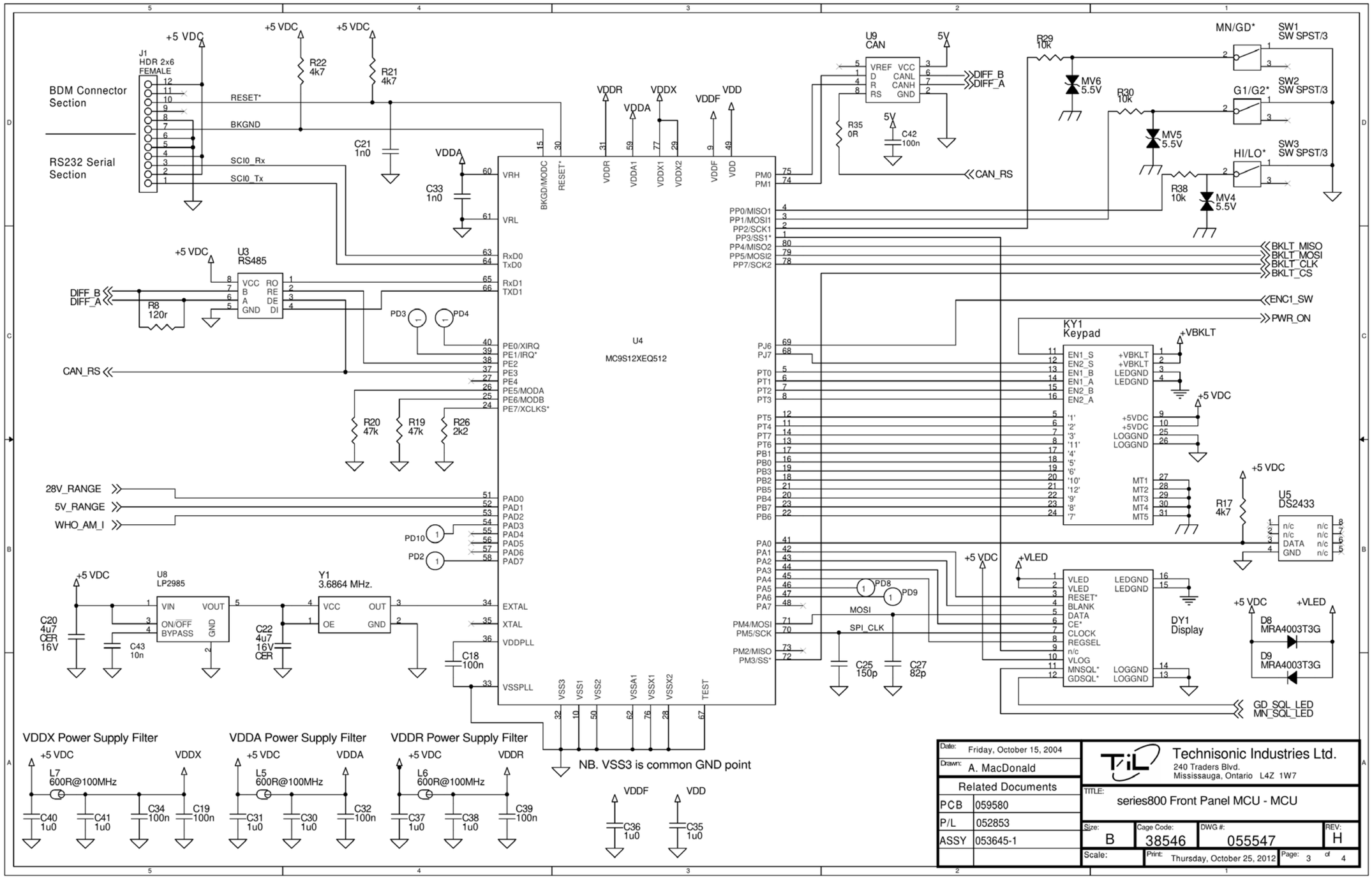

Date:	Friday, October 15, 2004
Drawn:	A. MacDonald
Related Documents	
PCB	059580
P/L	052853
ASSY	053645-1

Technisonic Industries Ltd.
240 Traders Blvd.
Mississauga, Ontario L4Z 1W7

TITLE: series800 Front Panel MCU - MCU

Size:	Cage Code:	DWG #:	REV:
B	38546	055547	H

Scale: | Print: Thursday, October 25, 2012 | Page: 3 of 4

Lighting Control Panel Back Light, SQL LED's

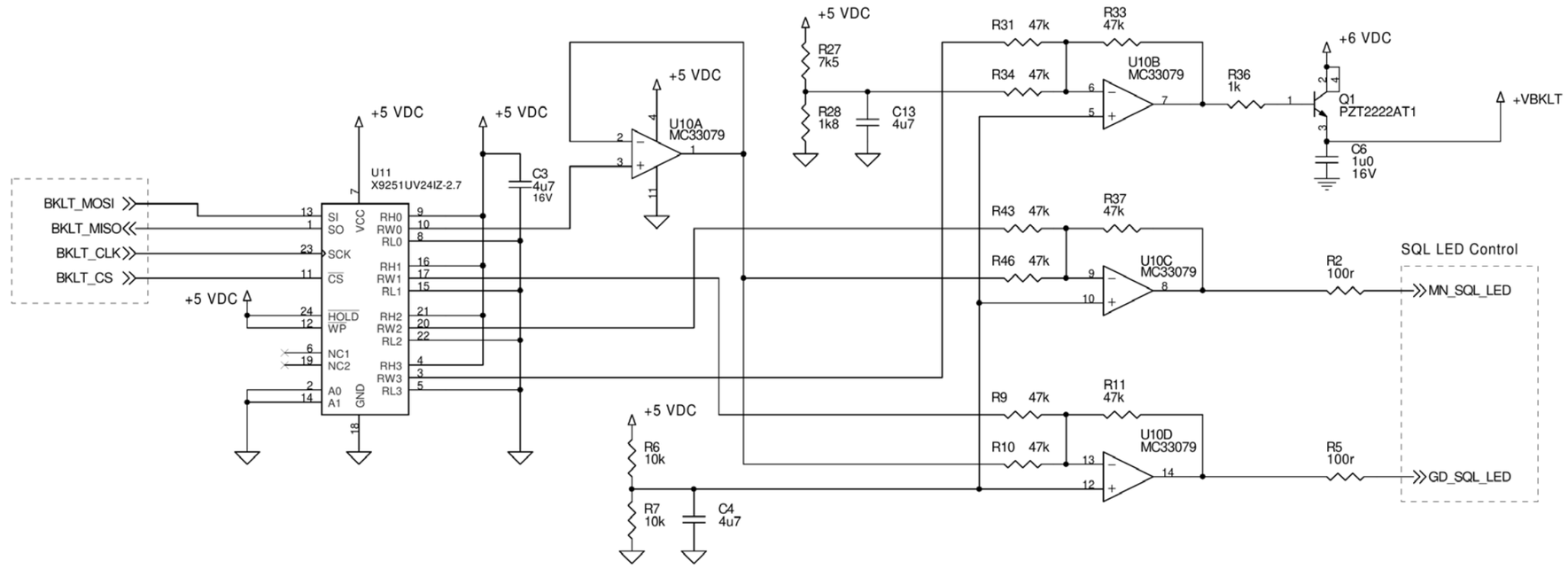

Lighting Control Voltage In

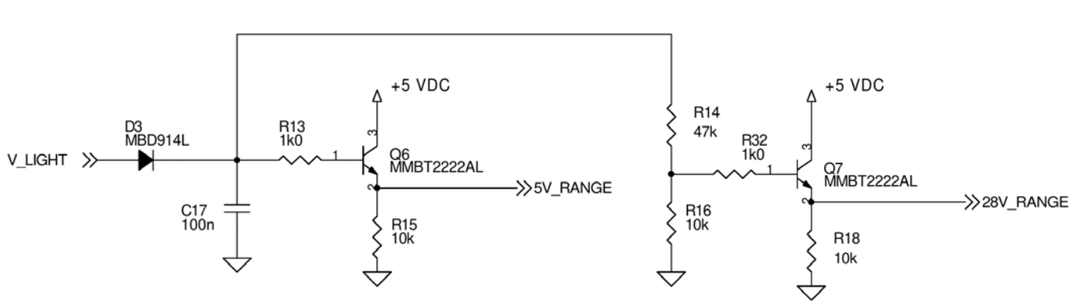

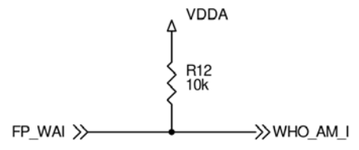

Date:	Friday, January 27, 2006
Drawn:	A. MacDonald

Related Documents

PCB	059580
P/L	052853
ASSY	053645-1

Technisonic Industries Ltd.
240 Traders Blvd.
Mississauga, Ontario L4Z 1W7

TITLE: series800 Front Panel MCU - Lighting Control

Size:	Cage Code:	DWG #:	REV:
B	38546	055547	H

Scale: Print: Tuesday, October 02, 2012 Page: 4 of 4

3.4 FRONT PANEL DIN RISER SCHEMATIC

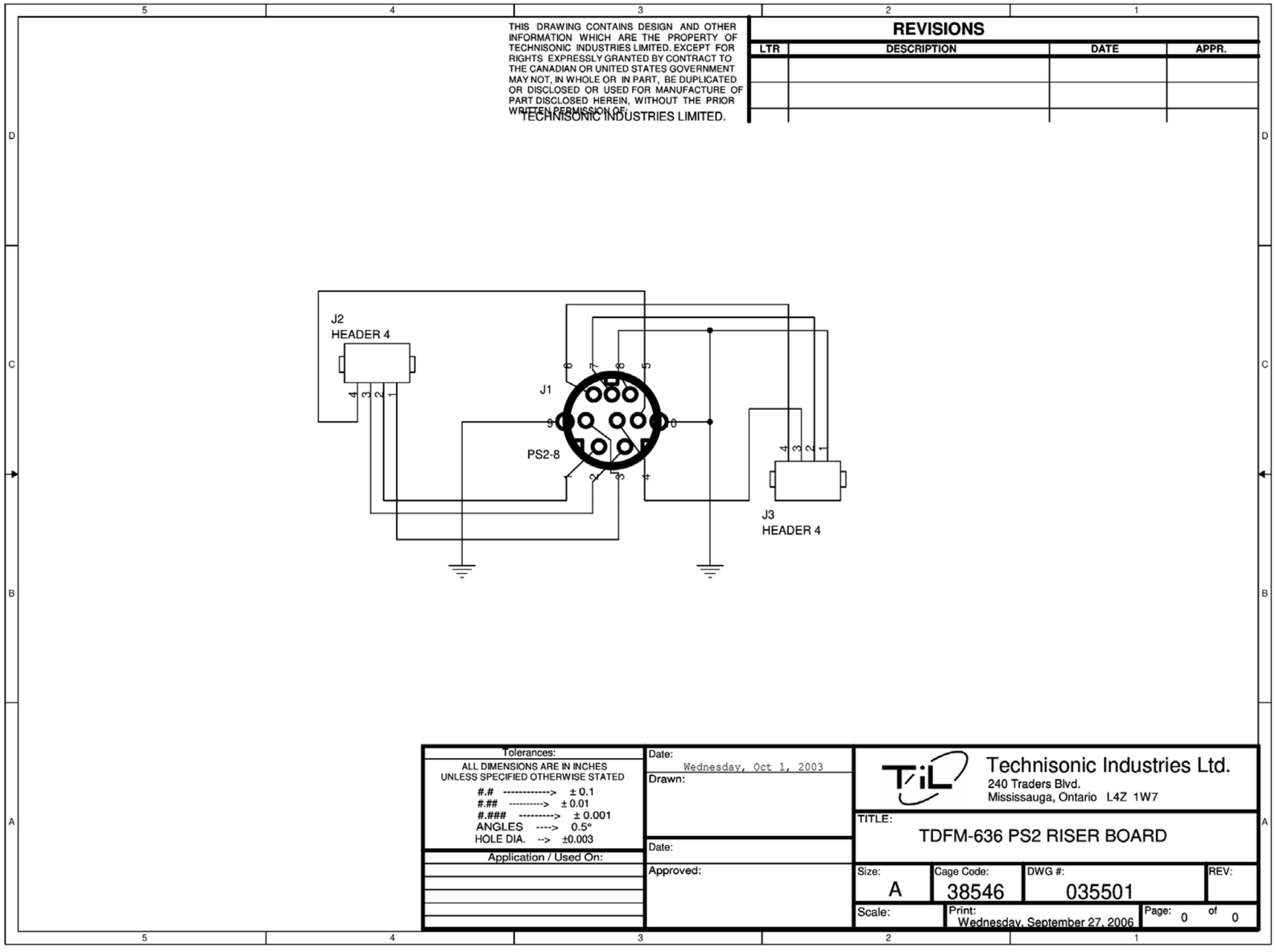

3.5 MAIN MCU SCHEMATIC

series800 Digital Radio	
12V PS & Airframe Connector	Page 2
Logic PS, CPU Clock & Debug	Page 3
CPU I/O	Page 4
Audio Card & USB Interface	Page 5
Front Panel Interface	Page 6
RF Module Interface	Page 7
Audio	Page 8

THIS DRAWING CONTAINS DESIGN AND OTHER INFORMATION WHICH ARE THE PROPERTY OF TECHNISONIC INDUSTRIES LIMITED. EXCEPT FOR RIGHTS EXPRESSLY GRANTED BY CONTRACT TO THE CANADIAN OR UNITED STATES GOVERNMENT THIS DRAWING MAY NOT, IN WHOLE OR IN PART, BE DUPLICATED OR DISCLOSED OR USED FOR MANUFACTURE OF PART DISCLOSED HEREIN, WITHOUT THE PRIOR WRITTEN PERMISSION OF:

TECHNISONIC INDUSTRIES LIMITED.

REVISIONS		
LTR	DESCRIPTION	DATE
H	Changed to MC9S12XEP100 MCU. See C/R #10068	26 JUL 2010
J	Change power on/hold, new osc & Vreg, RS232 RF interface (See CR 11315)	13 JUN 2011
K	Added voltage surge protection (see CR#12861)	03 OCT 2012
L	Tuned surge circuit. Mark unused components DNF. See CR 12885.	01 NOV 2012
M	Changed D3, D4, D5 to improve Vin high margin on CPU. CR 13020.	05 MAR 2013

UNUSED DEVICES

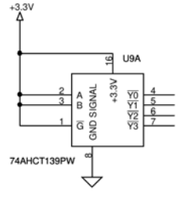

Date:	Tuesday, February 15, 2005
Drawn:	A. Upchurch
Related Documents	
PCB	059582
P/L	052873
ASSY	053662

Technisonic Industries Ltd.
240 Traders Blvd.
Mississauga, Ontario L4Z 1W7

TITLE: series800 MCU Board

Size:	Cage Code:	DWG #:	REV:
B	38546	055548	M

Scale: | Print: Tuesday, March 05, 2013 | Page: 1 of 8

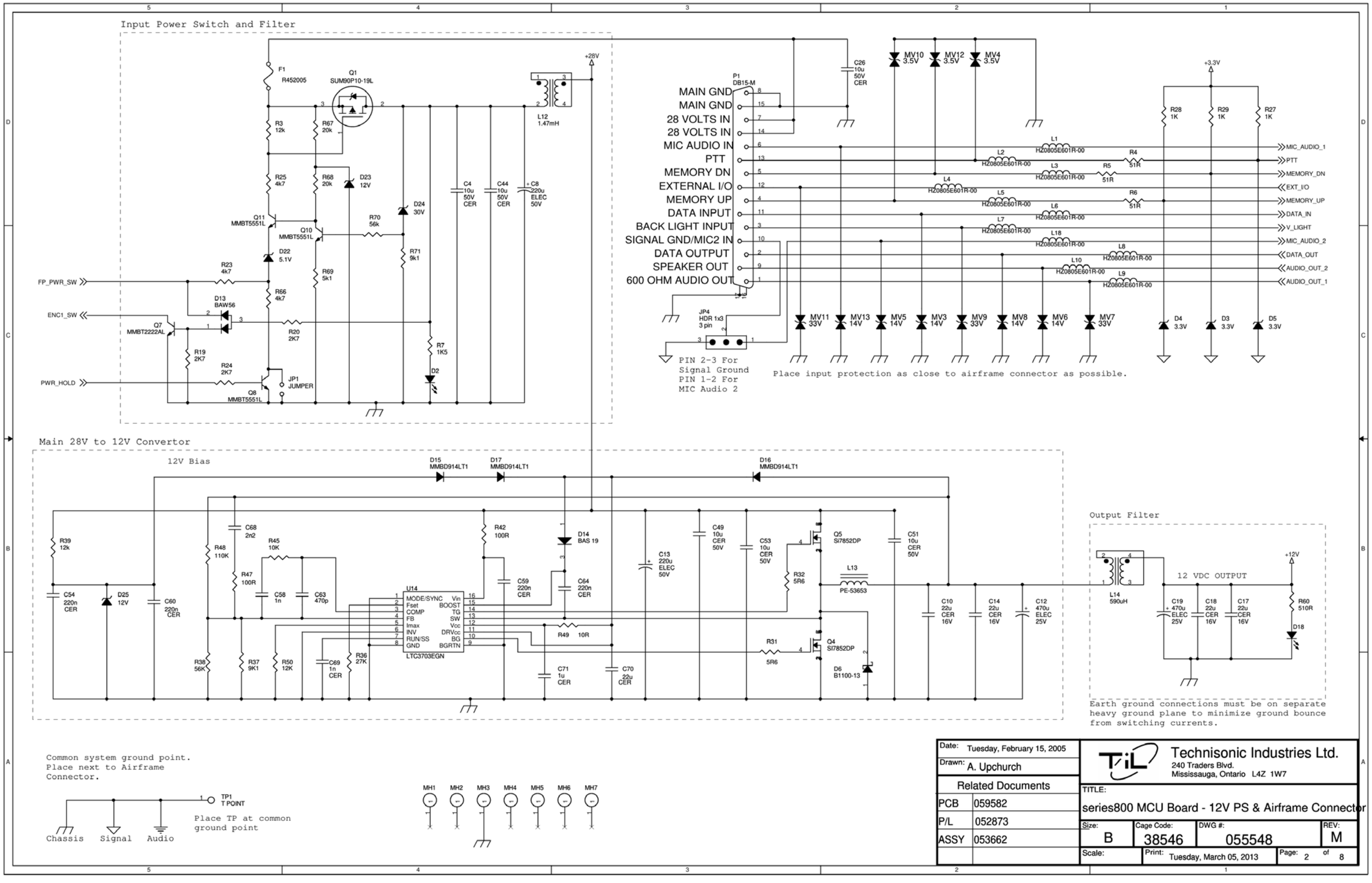
Input Power Switch and Filter
F1
R452005
Q1
SUM90P10-19L
+28V
L12
1.47mH
R3
12k
R67
20k
R25
4k7
R68
20k
D23
12V
D24
30V
C4
10u
50V
CER
C44
10u
50V
CER
C8
220u
ELEC
50V
Q11
MMBT5551L
Q10
MMBT5551L
R70
56k
R71
9k1
D22
5.1V
R23
4k7
R69
5k1
FP_PWR_SW
R66
4k7
D13
BAW56
ENC1_SW
Q7
MMBT2222AL
R20
2K7
R19
2K7
R24
2K7
R7
1K5
D2
PWR_HOLD
JP1
JUMPER
Q8
MMBT5551L
P1
DB15-M
MAIN GND
MAIN GND
28 VOLTS IN
28 VOLTS IN
MIC AUDIO IN
PTT
MEMORY DN
EXTERNAL I/O
MEMORY UP
DATA INPUT
BACK LIGHT INPUT
SIGNAL GND/MIC2 IN
DATA OUTPUT
SPEAKER OUT
600 OHM AUDIO OUT
C26
10u
50V
CER
MV10
3.5V
MV12
3.5V
MV4
3.5V
+3.3V
R28
1K
R29
1K
R27
1K
L1
HZ0805E601R-00
L2
HZ0805E601R-00
L3
HZ0805E601R-00
L4
HZ0805E601R-00
L5
HZ0805E601R-00
L6
HZ0805E601R-00
L7
HZ0805E601R-00
L18
HZ0805E601R-00
L8
HZ0805E601R-00
L10
HZ0805E601R-00
L9
HZ0805E601R-00
R4
51R
R5
51R
R6
51R
MIC_AUDIO_1
PTT
MEMORY_DN
EXT_I/O
MEMORY_UP
DATA_IN
V_LIGHT
MIC_AUDIO_2
DATA_OUT
AUDIO_OUT_2
AUDIO_OUT_1
JP4
HDR 1x3
3 pin
MV11
33V
MV13
14V
MV5
14V
MV3
14V
MV9
33V
MV8
14V
MV6
14V
MV7
33V
D4
3.3V
D3
3.3V
D5
3.3V
PIN 2-3 For
Signal Ground
PIN 1-2 For
MIC Audio 2
Place input protection as close to airframe connector as possible.
Main 28V to 12V Convertor
12V Bias
D15
MMBD914LT1
D17
MMBD914LT1
D16
MMBD914LT1
R39
12k
C68
2n2
R48
110K
R45
10K
R47
100R
C58
1n
C63
470p
R42
100R
D14
BAS 19
C59
220n
CER
C64
220n
CER
C13
220u
ELEC
50V
C49
10u
CER
50V
C53
10u
CER
50V
Q5
Si7852DP
C51
10u
CER
50V
R32
5R6
L13
PE-53653
C54
220n
CER
D25
12V
C60
220n
CER
U14
MODE/SYNC
Fset
COMP
FB
Imax
INV
RUN/SS
GND
Vin
BOOST
TG
SW
Vcc
DRVcc
BG
BGRTN
LTC3703EGN
R49
10R
R31
5R6
Q4
Si7852DP
D6
B1100-13
C10
22u
CER
16V
C14
22u
CER
16V
C12
470u
ELEC
25V
R38
56K
R37
9K1
R50
12K
C69
1n
CER
R36
27K
C71
1u
CER
C70
22u
CER
Output Filter
12 VDC OUTPUT
+12V
L14
590uH
C19
470u
ELEC
25V
C18
22u
CER
16V
C17
22u
CER
16V
R60
510R
D18
Earth ground connections must be on separate
heavy ground plane to minimize ground bounce
from switching currents.
Common system ground point.
Place next to Airframe
Connector.
TP1
T POINT
Chassis
Signal
Audio
Place TP at common
ground point
MH1
MH2
MH3
MH4
MH5
MH6
MH7
Date: Tuesday, February 15, 2005
Drawn: A. Upchurch
Related Documents
PCB 059582
P/L 052873
ASSY 053662
Technisonic Industries Ltd.
240 Traders Blvd.
Mississauga, Ontario L4Z 1W7
TITLE:
series800 MCU Board - 12V PS & Airframe Connector
Size: B
Cage Code: 38546
DWG #: 055548
REV: M
Scale:
Print: Tuesday, March 05, 2013
Page: 2 of 8

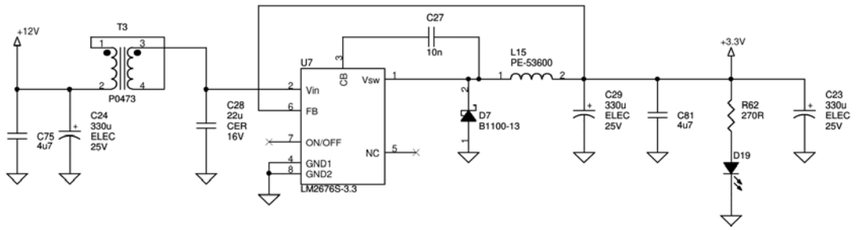

Logic Power Supplies. Refer to the following documents for more information:

- National LM2676 SIMPLE SWITCHER Datasheet
- National AppNote AN-1149, Layout Guidelines for Switching Power Supplies
- National AppNote AN-1229, SIMPLE SWITCHER PCB Layout Guidelines

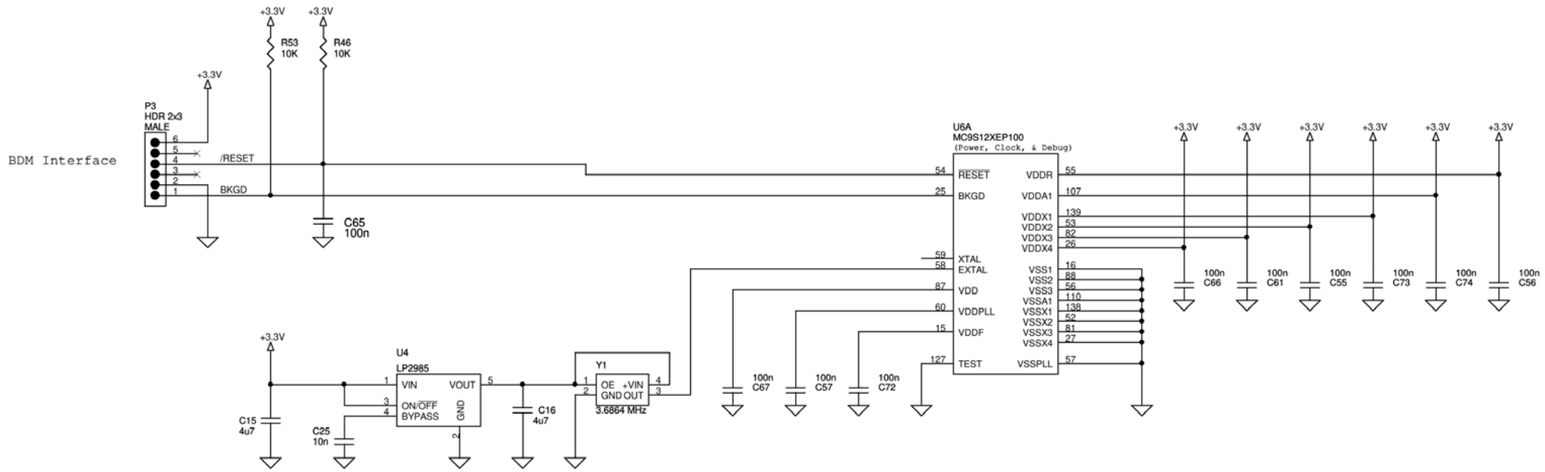

Date: Tuesday, February 15, 2005		Technisonic Industries Ltd. 240 Traders Blvd. Mississauga, Ontario L4Z 1W7	
Drawn: A. Upchurch		TITLE: series800 MCU Board - Logic PS, CPU Clock & Debug	
Related Documents		Size: B	Cage Code: 38546
PCB	059582	DWG #: 055548	REV: M
P/L	052873	Scale:	Print: Tuesday, March 05, 2013
ASSY	053662	Page: 3 of 8	

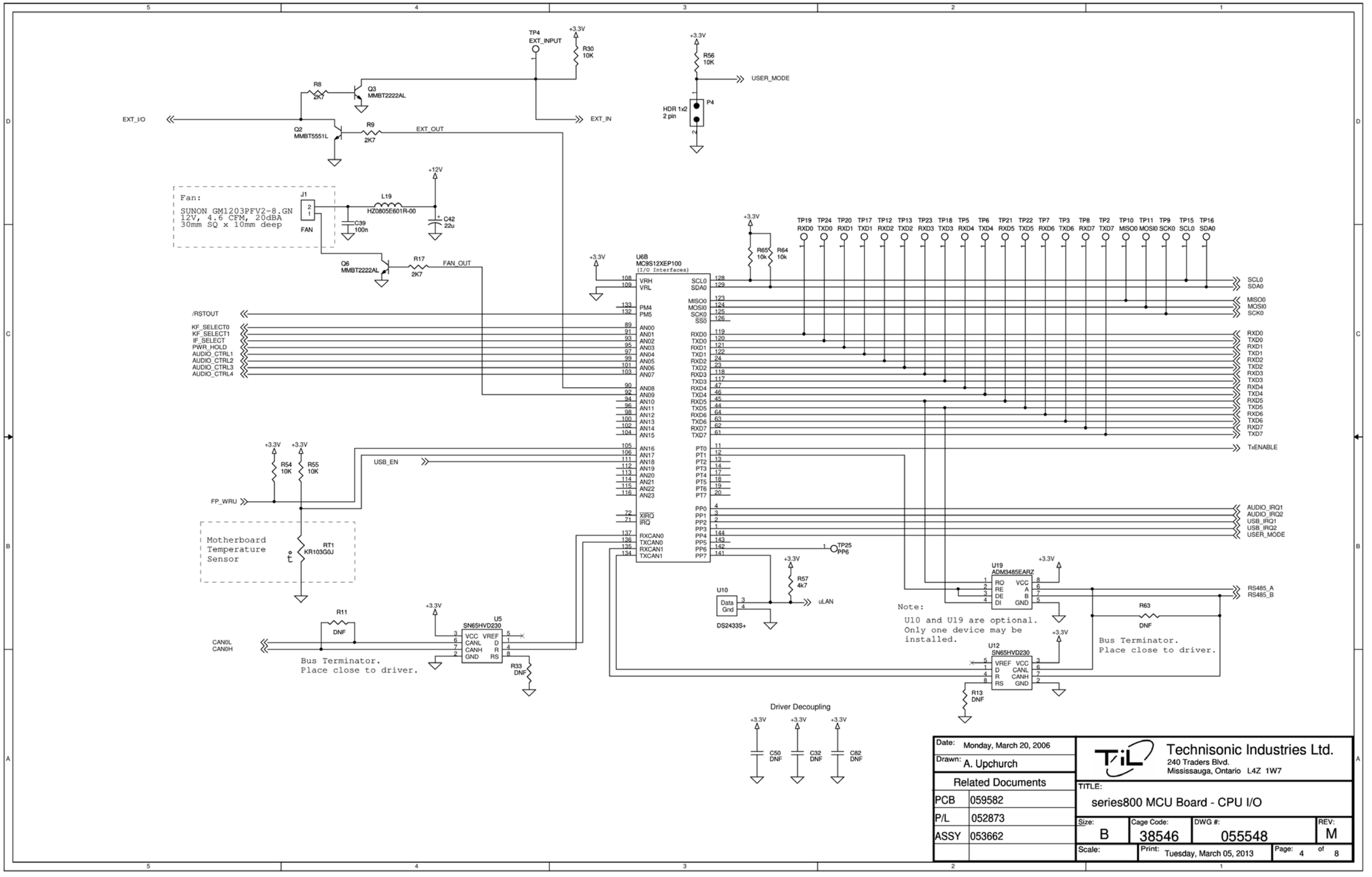
TP4
EXT_INPUT
+3.3V
R30
10K
R8
2K7
Q3
MMBT2222AL
EXT_I/O
EXT_IN
Q2
MMBT5551L
R9
2K7
EXT_OUT
+3.3V
R56
10K
USER_MODE
HDR 1x2
2 pin
P4
Fan:
SUNON GM1203PFV2-8.GN
12V, 4.6 CFM, 20dBA
30mm SQ x 10mm deep
J1
FAN
L19
HZ0805E601R-00
+12V
C39
100n
C42
22u
Q6
MMBT2222AL
R17
2K7
FAN_OUT
+3.3V
U6B
MC9S12XEP100
(I/O Interfaces)
R65
10k
R64
10k
TP19 RXD0
TP24 TXD0
TP20 RXD1
TP17 TXD1
TP12 RXD2
TP13 TXD2
TP23 RXD3
TP18 TXD3
TP5 RXD4
TP6 TXD4
TP21 RXD5
TP22 TXD5
TP7 RXD6
TP3 TXD6
TP8 RXD7
TP2 TXD7
TP10 MISO0
TP11 MOSI0
TP9 SCK0
TP15 SCL0
TP16 SDA0
/RSTOUT
KF_SELECT0
KF_SELECT1
IF_SELECT
PWR_HOLD
AUDIO_CTRL1
AUDIO_CTRL2
AUDIO_CTRL3
AUDIO_CTRL4
USB_EN
FP_WRU
+3.3V
R54
10K
R55
10K
Motherboard
Temperature
Sensor
RT1
KR103G0J
R11
DNF
U5
SN65HVD230
CAN0L
CAN0H
R33
DNF
Bus Terminator.
Place close to driver.
U10
Data
Gnd
DS2433S+
R57
4k7
uLAN
TP25
PP6
U19
ADM3485EARZ
RS485_A
RS485_B
R63
DNF
Bus Terminator.
Place close to driver.
Note:
U10 and U19 are optional.
Only one device may be
installed.
U12
SN65HVD230
R13
DNF
Driver Decoupling
C50
DNF
C32
DNF
C82
DNF
SCL0
SDA0
MISO0
MOSI0
SCK0
RXD0
TXD0
RXD1
TXD1
RXD2
TXD2
RXD3
TXD3
RXD4
TXD4
RXD5
TXD5
RXD6
TXD6
RXD7
TXD7
TxENABLE
AUDIO_IRQ1
AUDIO_IRQ2
USB_IRQ1
USB_IRQ2
USER_MODE
Date: Monday, March 20, 2006
Drawn: A. Upchurch
Related Documents
PCB 059582
P/L 052873
ASSY 053662
Technisonic Industries Ltd.
240 Traders Blvd.
Mississauga, Ontario L4Z 1W7
TITLE:
series800 MCU Board - CPU I/O
Size: B
Cage Code: 38546
DWG #: 055548
REV: M
Scale:
Print: Tuesday, March 05, 2013
Page: 4 of 8

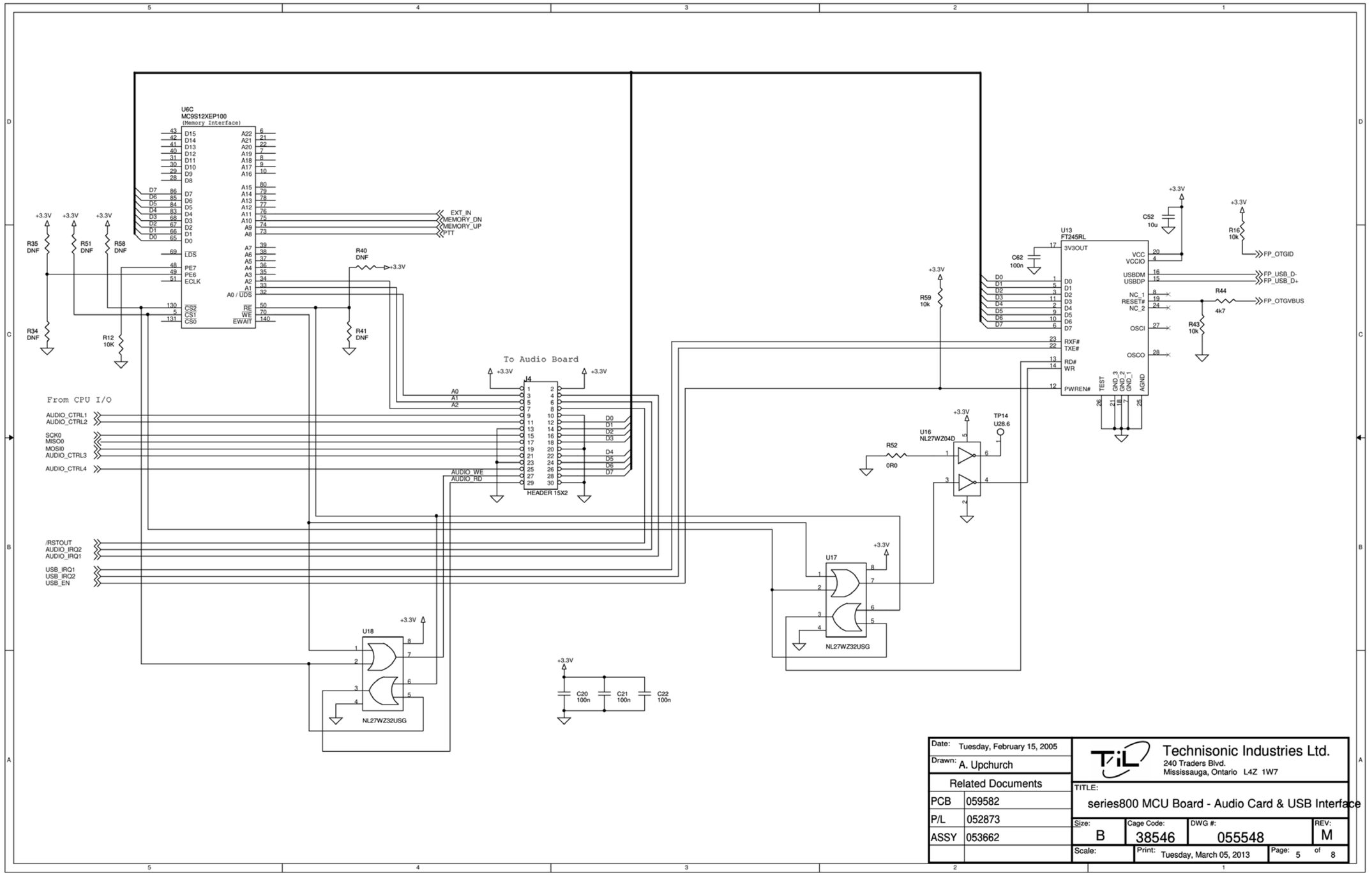
U6C
MC9S12XEP100
(Memory Interface)
EXT_IN
MEMORY_DN
MEMORY_UP
PTT
R35 DNF
R51 DNF
R58 DNF
R34 DNF
R12 10K
R40 DNF
R41 DNF
To Audio Board
J4
HEADER 15X2
From CPU I/O
AUDIO_CTRL1
AUDIO_CTRL2
SCK0
MISO0
MOSI0
AUDIO_CTRL3
AUDIO_CTRL4
AUDIO_WE
AUDIO_RD
/RSTOUT
AUDIO_IRQ2
AUDIO_IRQ1
USB_IRQ1
USB_IRQ2
USB_EN
U18
NL27WZ32USG
C20 100n
C21 100n
C22 100n
U13
FT245RL
C62 100n
C52 10u
R16 10k
FP_OTGID
FP_USB_D-
FP_USB_D+
R44 4k7
FP_OTGVBUS
R43 10k
R59 10k
R52 0R0
U16
NL27WZ04D
TP14
U28.6
U17
NL27WZ32USG
Date: Tuesday, February 15, 2005
Drawn: A. Upchurch
Related Documents
PCB 059582
P/L 052873
ASSY 053662
Technisonic Industries Ltd.
240 Traders Blvd.
Mississauga, Ontario L4Z 1W7
TITLE:
series800 MCU Board - Audio Card & USB Interface
Size: B
Cage Code: 38546
DWG #: 055548
REV: M
Scale:
Print: Tuesday, March 05, 2013
Page: 5 of 8

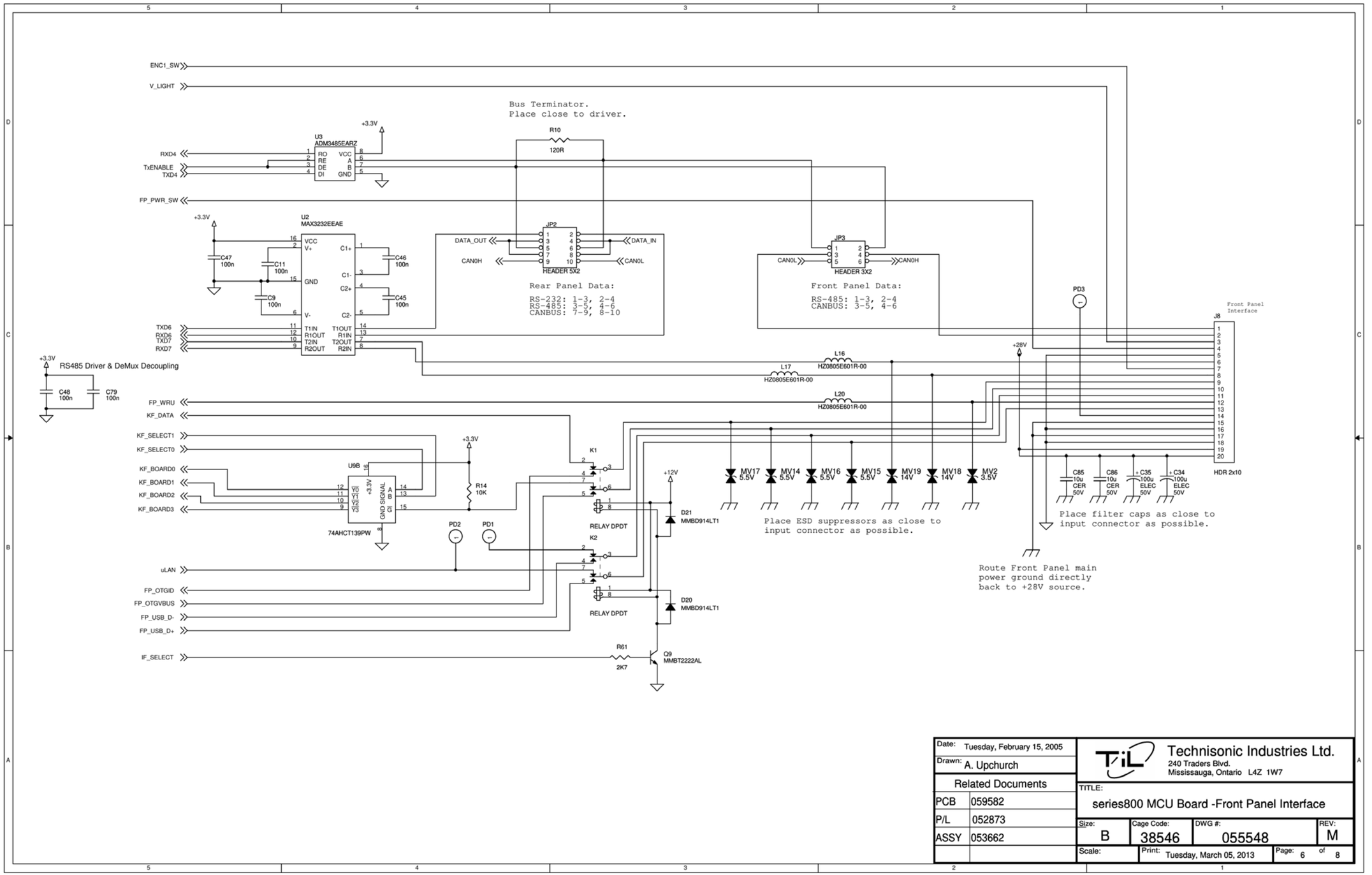
ENC1_SW
V_LIGHT
Bus Terminator.
Place close to driver.
U3
ADM3485EARZ
RXD4
TxENABLE
TXD4
FP_PWR_SW
R10
120R
+3.3V
U2
MAX3232EEAE
C47 100n
C11 100n
C9 100n
C46 100n
C45 100n
TXD6
RXD6
TXD7
RXD7
JP2
DATA_OUT
DATA_IN
CAN0H
CAN0L
HEADER 5X2
Rear Panel Data:
RS-232: 1-3, 2-4
RS-485: 3-5, 4-6
CANBUS: 7-9, 8-10
JP3
HEADER 3X2
Front Panel Data:
RS-485: 1-3, 2-4
CANBUS: 3-5, 4-6
PD3
Front Panel Interface
J8
HDR 2x10
+28V
L16
HZ0805E601R-00
L17
HZ0805E601R-00
L20
HZ0805E601R-00
RS485 Driver & DeMux Decoupling
C48 100n
C79 100n
FP_WRU
KF_DATA
KF_SELECT1
KF_SELECT0
KF_BOARD0
KF_BOARD1
KF_BOARD2
KF_BOARD3
U9B
74AHCT139PW
R14 10K
K1
K2
RELAY DPDT
PD2
PD1
D21
MMBD914LT1
D20
MMBD914LT1
+12V
MV17 5.5V
MV14 5.5V
MV16 5.5V
MV15 5.5V
MV19 14V
MV18 14V
MV2 3.5V
Place ESD suppressors as close to input connector as possible.
C85 10u CER 50V
C86 10u CER 50V
C35 100u ELEC 50V
C34 100u ELEC 50V
Place filter caps as close to input connector as possible.
Route Front Panel main power ground directly back to +28V source.
uLAN
FP_OTGID
FP_OTGVBUS
FP_USB_D-
FP_USB_D+
IF_SELECT
R61 2K7
Q9
MMBT2222AL
Date: Tuesday, February 15, 2005
Drawn: A. Upchurch
Related Documents
PCB 059582
P/L 052873
ASSY 053662
Technisonic Industries Ltd.
240 Traders Blvd.
Mississauga, Ontario L4Z 1W7
TITLE:
series800 MCU Board -Front Panel Interface
Size: B
Cage Code: 38546
DWG #: 055548
REV: M
Scale:
Print: Tuesday, March 05, 2013
Page: 6 of 8

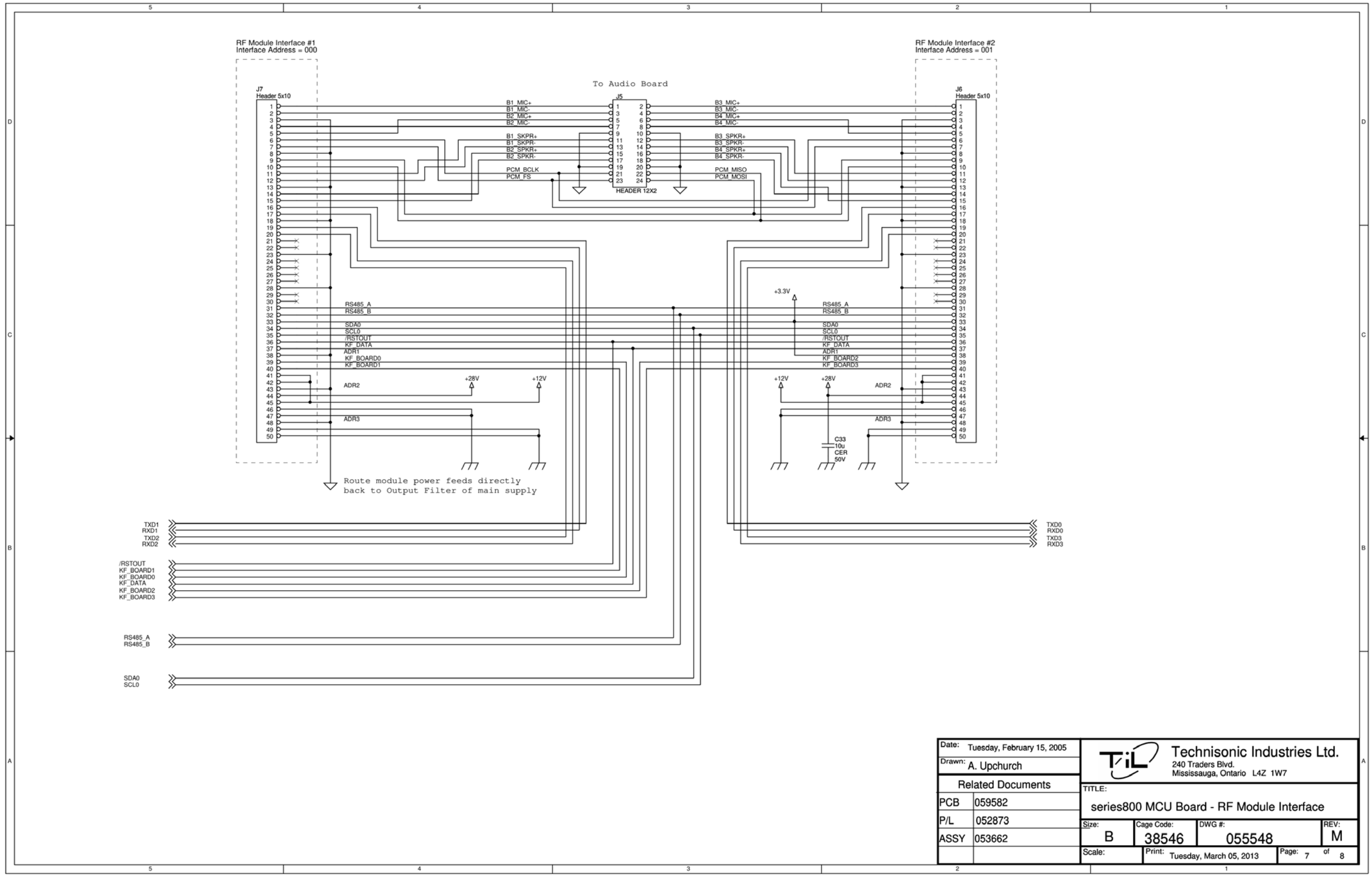
RF Module Interface #1
Interface Address = 000
RF Module Interface #2
Interface Address = 001
To Audio Board
J7
Header 5x10
J6
Header 5x10
J5
HEADER 12X2
B1_MIC+
B1_MIC-
B2_MIC+
B2_MIC-
B1_SKPR+
B1_SKPR-
B2_SPKR+
B2_SPKR-
PCM_BCLK
PCM_FS
B3_MIC+
B3_MIC-
B4_MIC+
B4_MIC-
B3_SPKR+
B3_SPKR-
B4_SPKR+
B4_SPKR-
PCM_MISO
PCM_MOSI
RS485_A
RS485_B
SDA0
SCL0
/RSTOUT
KF_DATA
ADR1
KF_BOARD0
KF_BOARD1
ADR2
ADR3
+28V
+12V
+3.3V
KF_BOARD2
KF_BOARD3
C33
10u
CER
50V
Route module power feeds directly
back to Output Filter of main supply
TXD1
RXD1
TXD2
RXD2
TXD0
RXD0
TXD3
RXD3
/RSTOUT
KF_BOARD1
KF_BOARD0
KF_DATA
KF_BOARD2
KF_BOARD3
RS485_A
RS485_B
SDA0
SCL0
Date: Tuesday, February 15, 2005
Drawn: A. Upchurch
Related Documents
PCB 059582
P/L 052873
ASSY 053662
Technisonic Industries Ltd.
240 Traders Blvd.
Mississauga, Ontario L4Z 1W7
TITLE:
series800 MCU Board - RF Module Interface
Size: B
Cage Code: 38546
DWG #: 055548
REV: M
Scale:
Print: Tuesday, March 05, 2013
Page: 7 of 8

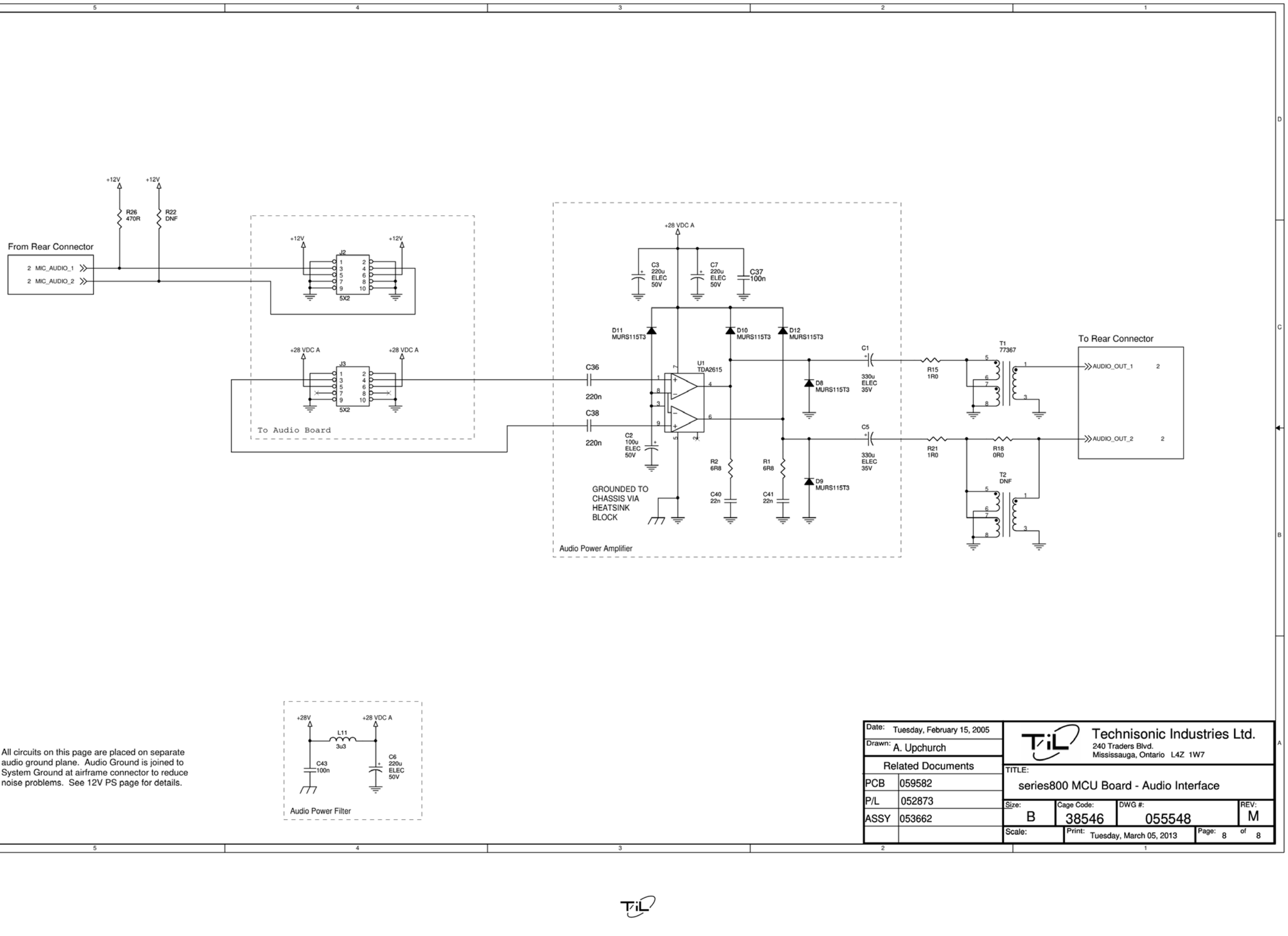
From Rear Connector
2 MIC_AUDIO_1
2 MIC_AUDIO_2
+12V
+12V
R26
470R
R22
DNF
J2
5X2
To Audio Board
J3
5X2
+28 VDC A
C36
220n
C38
220n
C2
100u
ELEC
50V
GROUNDED TO
CHASSIS VIA
HEATSINK
BLOCK
C3
220u
ELEC
50V
C7
220u
ELEC
50V
C37
100n
D11
MURS115T3
D10
MURS115T3
D12
MURS115T3
U1
TDA2615
D8
MURS115T3
D9
MURS115T3
R2
6R8
R1
6R8
C40
22n
C41
22n
C1
330u
ELEC
35V
C5
330u
ELEC
35V
R15
1R0
R21
1R0
R18
0R0
T1
77367
T2
DNF
To Rear Connector
AUDIO_OUT_1
AUDIO_OUT_2
Audio Power Amplifier
All circuits on this page are placed on separate audio ground plane. Audio Ground is joined to System Ground at airframe connector to reduce noise problems. See 12V PS page for details.
+28V
L11
3u3
C43
100n
C6
220u
ELEC
50V
Audio Power Filter
Date: Tuesday, February 15, 2005
Drawn: A. Upchurch
Related Documents
PCB 059582
P/L 052873
ASSY 053662
Technisonic Industries Ltd.
240 Traders Blvd.
Mississauga, Ontario L4Z 1W7
TITLE:
series800 MCU Board - Audio Interface
Size: B
Cage Code: 38546
DWG #: 055548
REV: M
Scale:
Print: Tuesday, March 05, 2013
Page: 8 of 8

3.6 AUDIO SCHEMATIC – ORIGINAL

THIS DRAWING CONTAINS DESIGN AND OTHER INFORMATION WHICH ARE THE PROPERTY OF TECHNISONIC INDUSTRIES LIMITED. EXCEPT FOR RIGHTS EXPRESSLY GRANTED BY CONTRACT TO THE CANADIAN OR UNITED STATES GOVERNMENT THIS DRAWING MAY NOT, IN WHOLE OR IN PART, BE DUPLICATED OR DISCLOSED OR USED FOR MANUFACTURE OF PART DISCLOSED HEREIN, WITHOUT THE PRIOR WRITTEN PERMISSION OF:

TECHNISONIC INDUSTRIES LIMITED.

REVISIONS

LTR	DESCRIPTION	DATE
A	Corrected errors and added Test points. See C/R #08303	05 Sep 08
B	Design improvements. See C/R #08313	19 Sep 08
C	Renamed Design. See C/R #08319	25 Sep 08
D	Design improvements. See C/R #08334	30 Oct 08
E	Changed Hardware Gains. See C/R #12610	13 Feb 12
F	Added hardware sidetone circuit. See C/R #13133	12 Jul 13

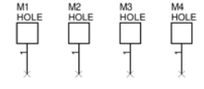

Related Drawings:

PCB: 079771
P/L: 072987
ASSY: 073710

Date: Thursday, April 19, 2007	Technisonic Industries Ltd. 240 Traders Blvd. Mississauga, Ontario L4Z 1W7		
Drawn: A. Upchurch			
Application / Used On:	TITLE: series800 Analog Audio Card Schematic		
	Size: B	Cage Code: 38546	DWG #: 075588 REV: F
	Scale:	Print: Friday, July 12, 2013	Page: 1 of 3

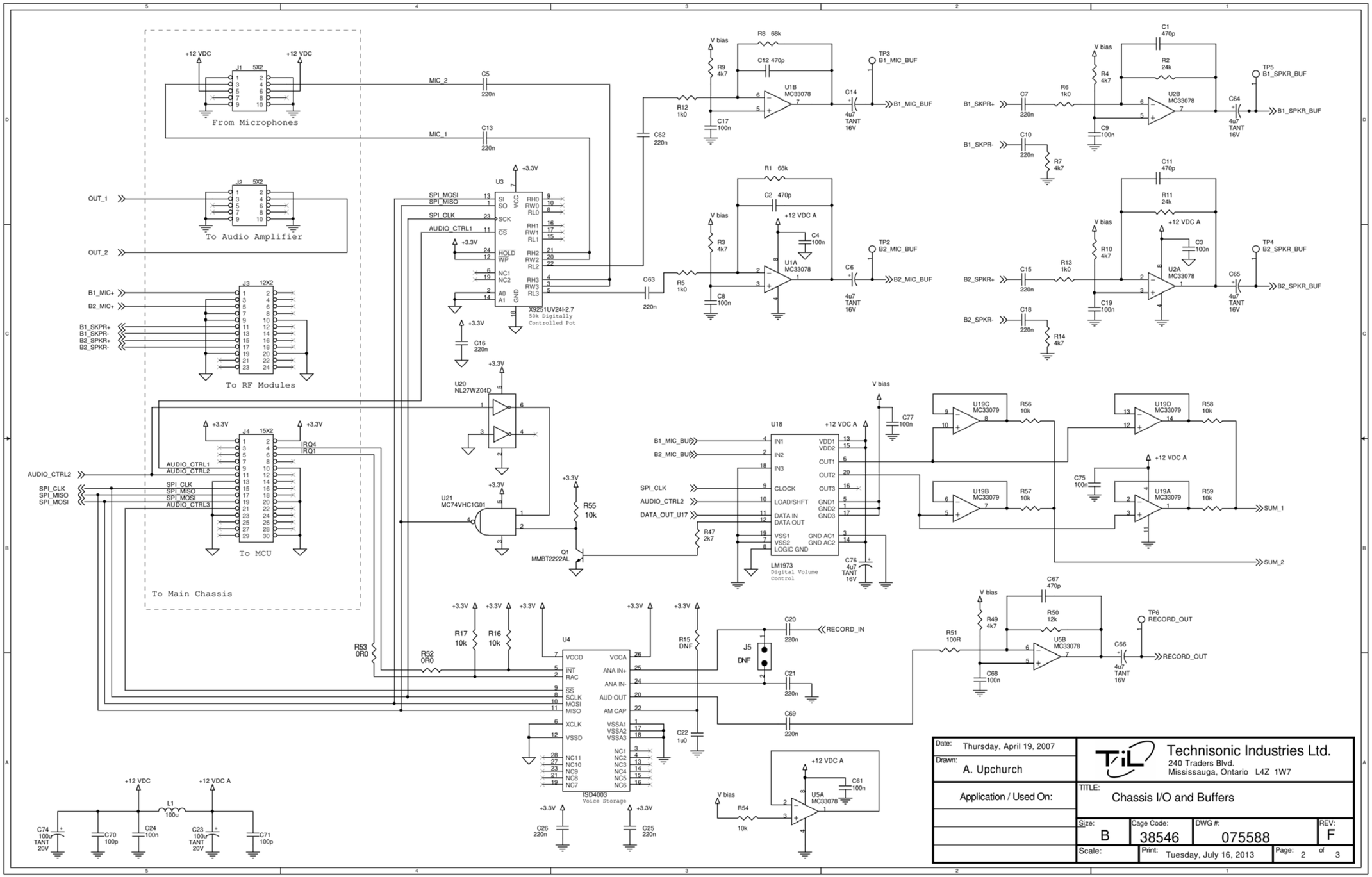
From Microphones
To Audio Amplifier
To RF Modules
To MCU
To Main Chassis
X9251UV24I-2.7
50k Digitally Controlled Pot
ISD4003
Voice Storage
LM1973
Digital Volume Control
MC74VHC1G01
NL27WZ04D
MMBT2222AL
MC33078
Date: Thursday, April 19, 2007
Drawn: A. Upchurch
Application / Used On:
Technisonic Industries Ltd.
240 Traders Blvd.
Mississauga, Ontario L4Z 1W7
TITLE: Chassis I/O and Buffers
Size: B
Cage Code: 38546
DWG #: 075588
REV: F
Scale:
Print: Tuesday, July 16, 2013
Page: 2 of 3

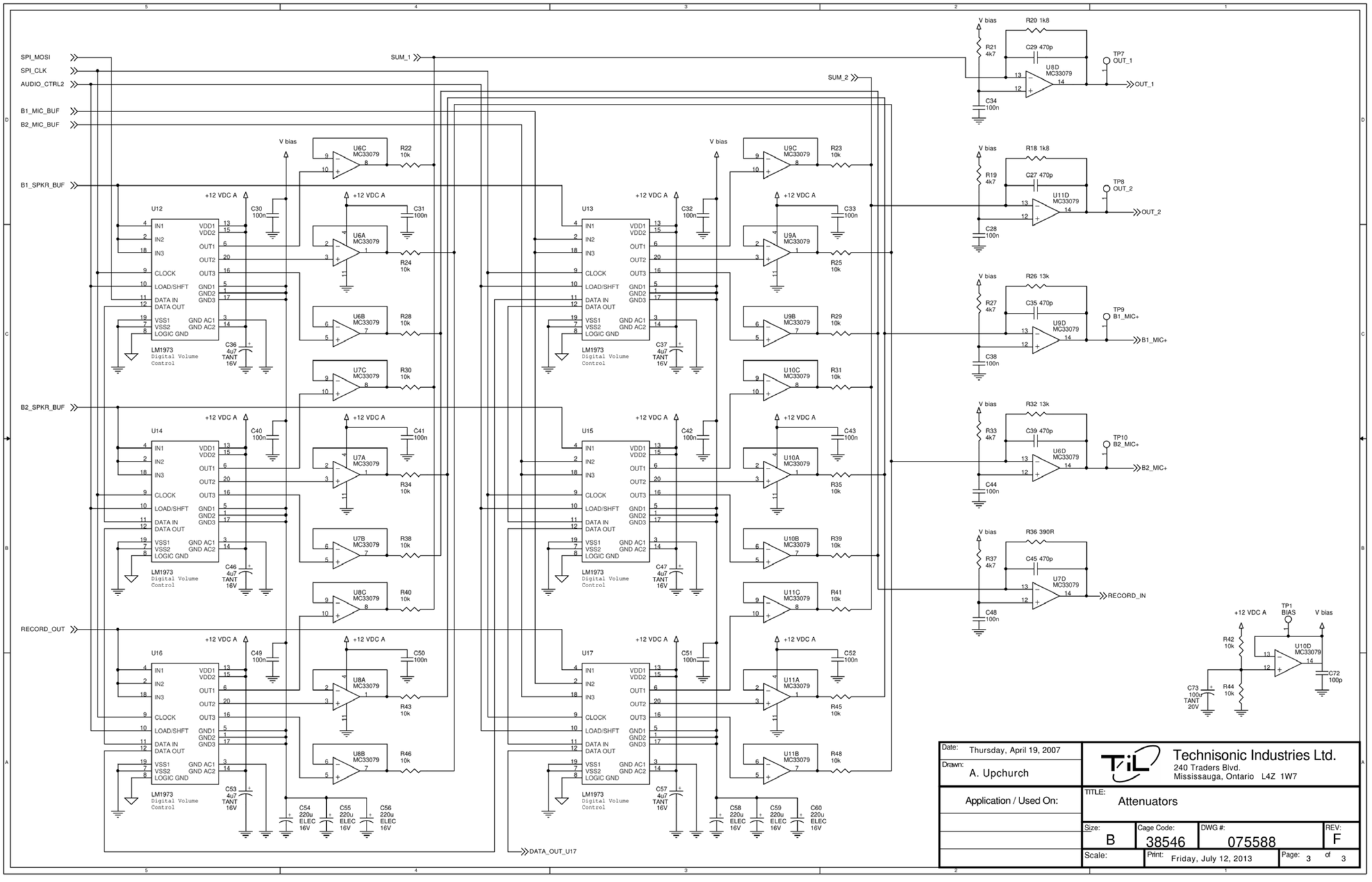
SPI_MOSI
SPI_CLK
AUDIO_CTRL2
B1_MIC_BUF
B2_MIC_BUF
B1_SPKR_BUF
B2_SPKR_BUF
RECORD_OUT
SUM_1
SUM_2
DATA_OUT_U17
V bias
+12 VDC A
U12
U13
U14
U15
U16
U17
LM1973
Digital Volume Control
U6A MC33079
U6B MC33079
U6C MC33079
U7A MC33079
U7B MC33079
U7C MC33079
U8A MC33079
U8B MC33079
U8C MC33079
U9A MC33079
U9B MC33079
U9C MC33079
U10A MC33079
U10B MC33079
U10C MC33079
U11A MC33079
U11B MC33079
U11C MC33079
U8D MC33079
U9D MC33079
U10D MC33079
U11D MC33079
U6D MC33079
U7D MC33079
R20 1k8
R21 4k7
C29 470p
C34 100n
R18 1k8
R19 4k7
C27 470p
C28 100n
R26 13k
R27 4k7
C35 470p
C38 100n
R32 13k
R33 4k7
C39 470p
C44 100n
R36 390R
R37 4k7
C45 470p
C48 100n
R42 10k
R44 10k
C73 100u TANT 20V
C72 100p
TP1 BIAS
TP7 OUT_1
TP8 OUT_2
TP9 B1_MIC+
TP10 B2_MIC+
OUT_1
OUT_2
B1_MIC+
B2_MIC+
RECORD_IN
Date: Thursday, April 19, 2007
Drawn: A. Upchurch
Application / Used On:
Technisonic Industries Ltd.
240 Traders Blvd.
Mississauga, Ontario L4Z 1W7
TITLE: Attenuators
Size: B
Cage Code: 38546
DWG #: 075588
REV: F
Scale:
Print: Friday, July 12, 2013
Page: 3 of 3

3.7 AUDIO SCHEMATIC – NEW

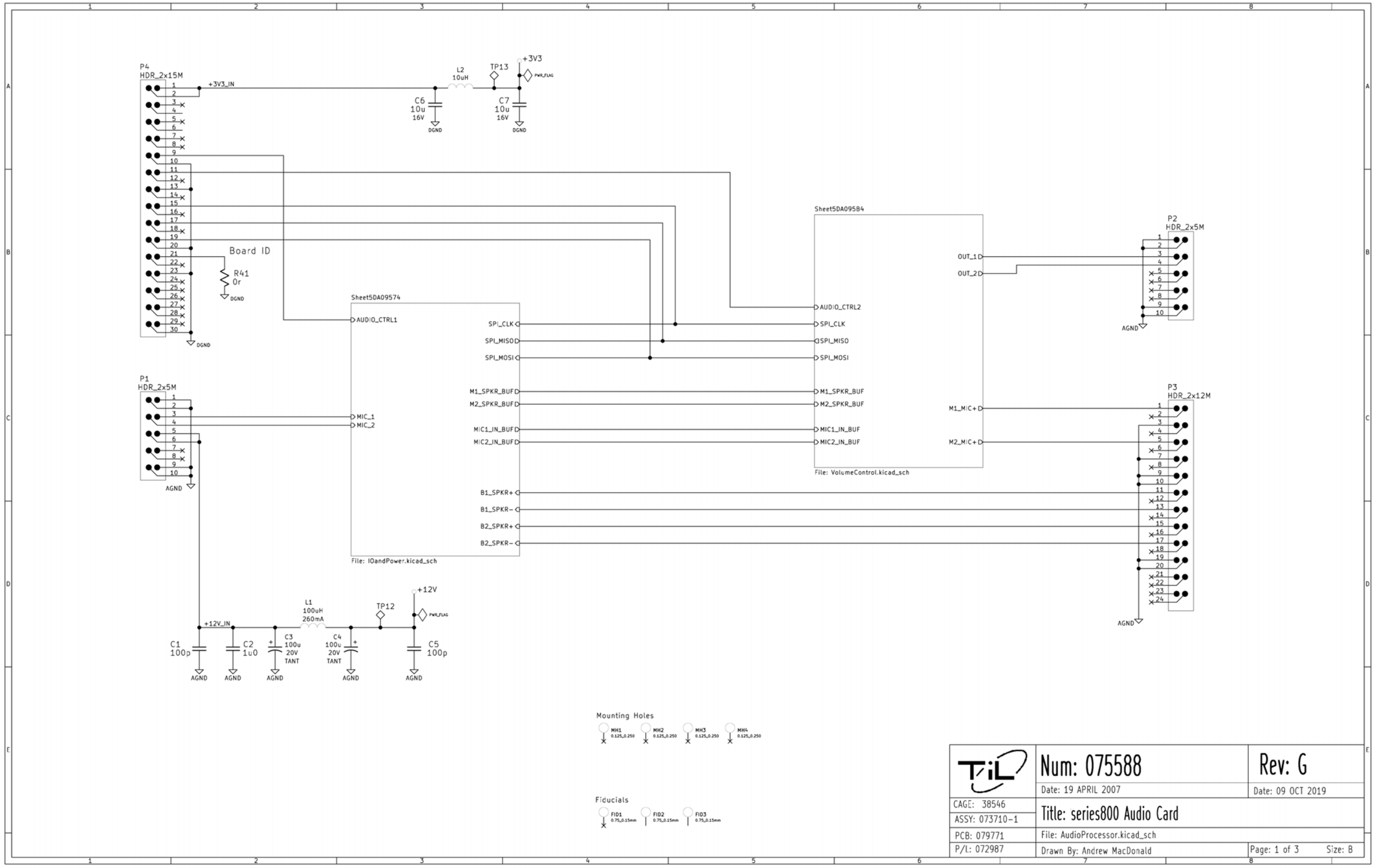

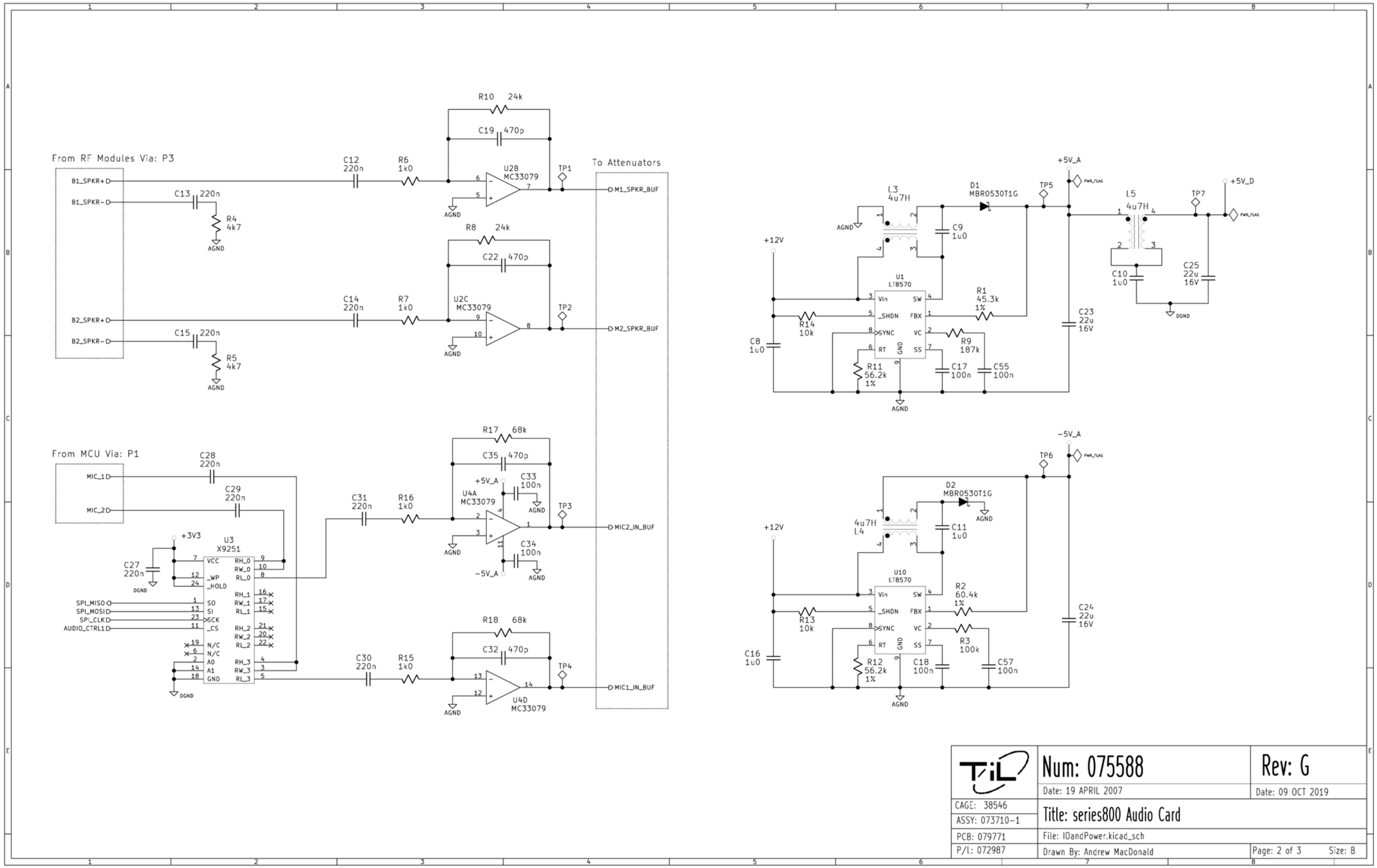

TiL	Num: 075588	Rev: G
	Date: 19 APRIL 2007	Date: 09 OCT 2019
CAGE: 38546	Title: series800 Audio Card	
ASSY: 073710-1		
PCB: 079771	File: IOandPower.kicad_sch	
P/L: 072987	Drawn By: Andrew MacDonald	Page: 2 of 3 Size: B

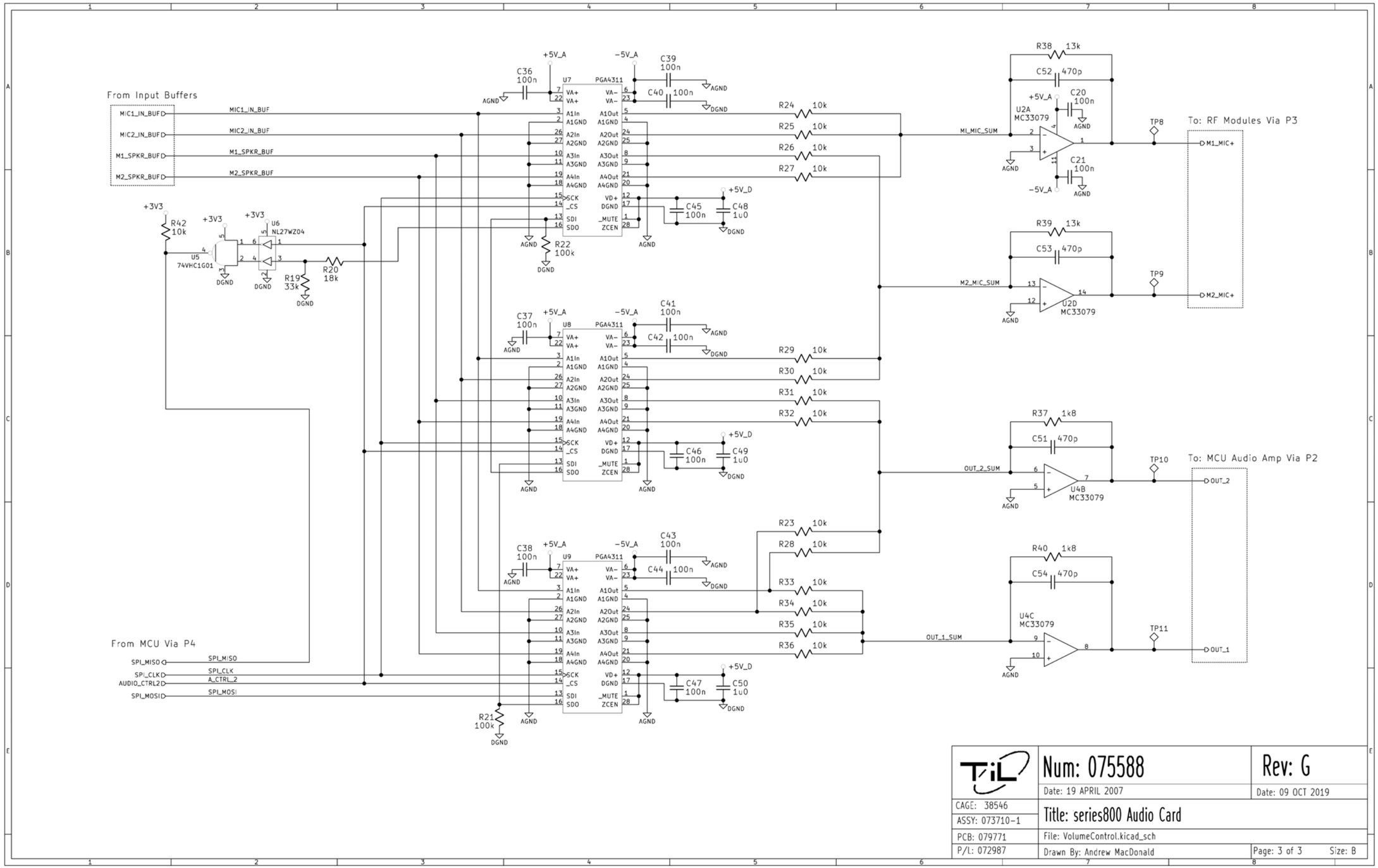
From Input Buffers
MIC1_IN_BUF
MIC2_IN_BUF
M1_SPKR_BUF
M2_SPKR_BUF
From MCU Via P4
SPI_MISO
SPI_CLK
AUDIO_CTRL2
SPI_MOSI
A_CTRL_2
U7 PGA4311
U8 PGA4311
U9 PGA4311
U5 74VHC1G01
U6 NL27WZ04
U2A MC33079
U2D MC33079
U4B MC33079
U4C MC33079
+5V_A
-5V_A
+5V_D
+3V3
AGND
DGND
M1_MIC_SUM
M2_MIC_SUM
OUT_2_SUM
OUT_1_SUM
To: RF Modules Via P3
To: MCU Audio Amp Via P2
M1_MIC+
M2_MIC+
OUT_2
OUT_1
Num: 075588
Rev: G
Date: 19 APRIL 2007
Date: 09 OCT 2019
CAGE: 38546
ASSY: 073710-1
PCB: 079771
P/L: 072987
Title: series800 Audio Card
File: VolumeControl.kicad_sch
Drawn By: Andrew MacDonald
Page: 3 of 3
Size: B

3.8 MODULE CARRIER SCHEMATIC

THIS DRAWING CONTAINS DESIGN AND OTHER INFORMATION WHICH ARE THE PROPERTY OF TECHNISONIC INDUSTRIES LIMITED. EXCEPT FOR RIGHTS EXPRESSLY GRANTED BY CONTRACT TO THE CANADIAN OR UNITED STATES GOVERNMENT THIS DRAWING MAY NOT, IN WHOLE OR IN PART, BE DUPLICATED OR DISCLOSED OR USED FOR MANUFACTURE OF PART DISCLOSED HEREIN, WITHOUT THE PRIOR WRITTEN PERMISSION OF:

TECHNISONIC INDUSTRIES LIMITED.

REVISIONS

LTR	DESCRIPTION	DATE
J	ADDED RX PREAMP, CHANGED MODULE DATA LINES. SEE C/R 11252	15 APR 11
K	Added R55, Changed part valus. Se C/R11385	20 AUG 11
L	Added & Removed Components See C.R.12723	20 JUNE 12
M	Disabled input current limit. See C/R 12868	11 OCT 12
N	CHANGED COMPONENT VALUES, AS PER C.R.13116	09 SEPT 13
P	Changed C25 to L14. C. R. 15690	27 JAN. 16

HIGHEST DESIGNATION(S) USED							
C40	D18	JP2	J8	L15	Q30	R82	TP11
U5							

DESIGNATION(S) NOT USED							
C12	C25	C32	D3	D8	D10	D11	L5
R41	R42	R46	R62	R70			

Date: Thursday, June 23, 2005
Drawn: J. Rorke
Application / Used On:
ASSY: 053646
PCB: 059578
P/L: 062908

Technisonic Industries Ltd.
240 Traders Blvd.
Mississauga, Ontario L4Z 1W7

TITLE: Series800 Module Carrier Board

Size: B | Cage Code: 38546 | DWG #: 055545 | REV: P

Scale: | Print: Wednesday, January 27, 2016 | Page: 1 of 3

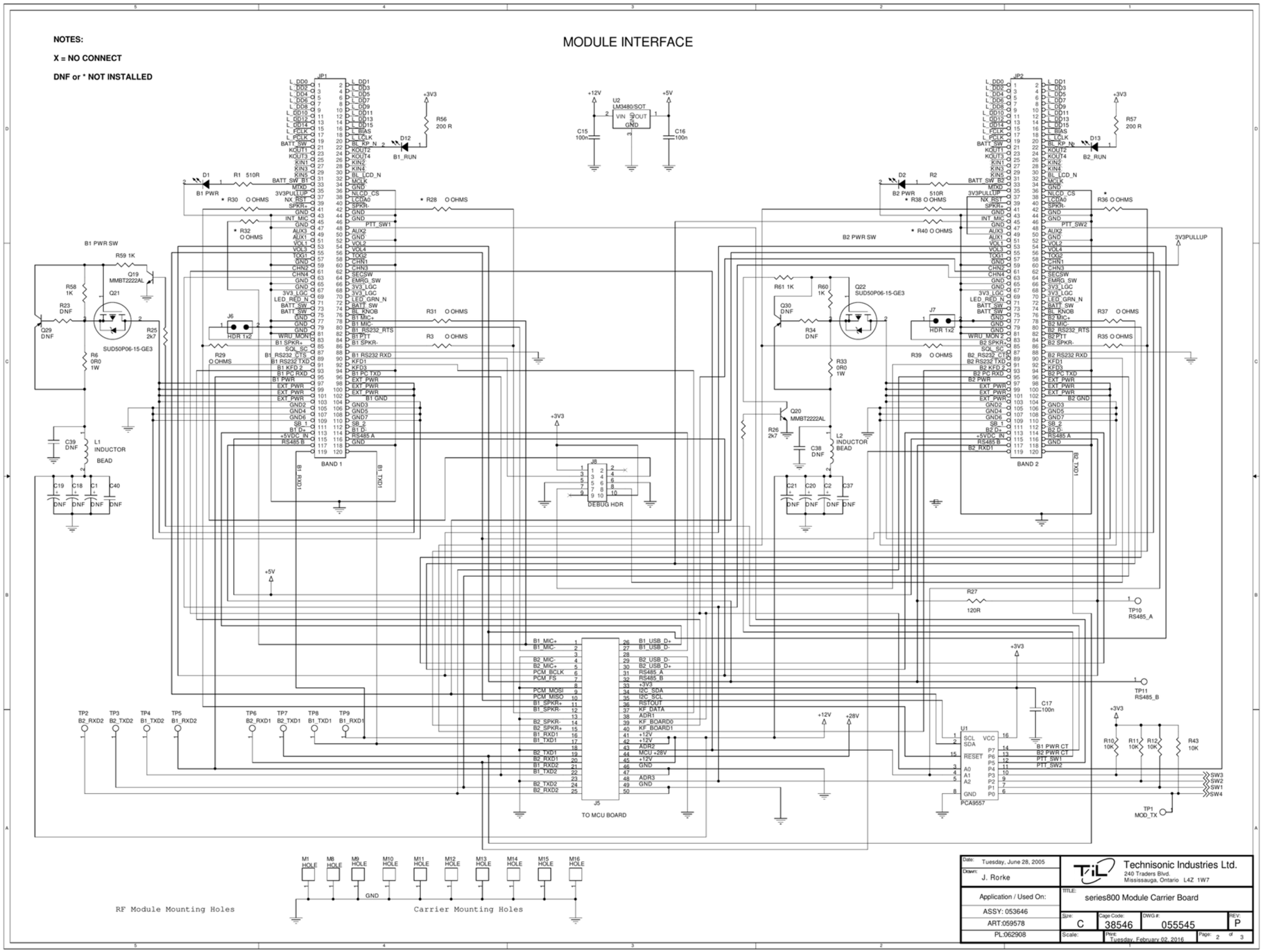
NOTES:
X = NO CONNECT
DNF or * NOT INSTALLED
MODULE INTERFACE
BAND 1
BAND 2
DEBUG HDR
TO MCU BOARD
RF Module Mounting Holes
Carrier Mounting Holes
Date: Tuesday, June 28, 2005
Drawn: J. Rorke
Technisonic Industries Ltd.
240 Traders Blvd.
Mississauga, Ontario L4Z 1W7
Application / Used On:
ASSY: 053646
ART:059578
PL:062908
TITLE: series800 Module Carrier Board
Size: C
Cage Code: 38546
DWG #: 055545
REV: P
Scale:
Print: Tuesday, February 02, 2016
Page: 2 of 3

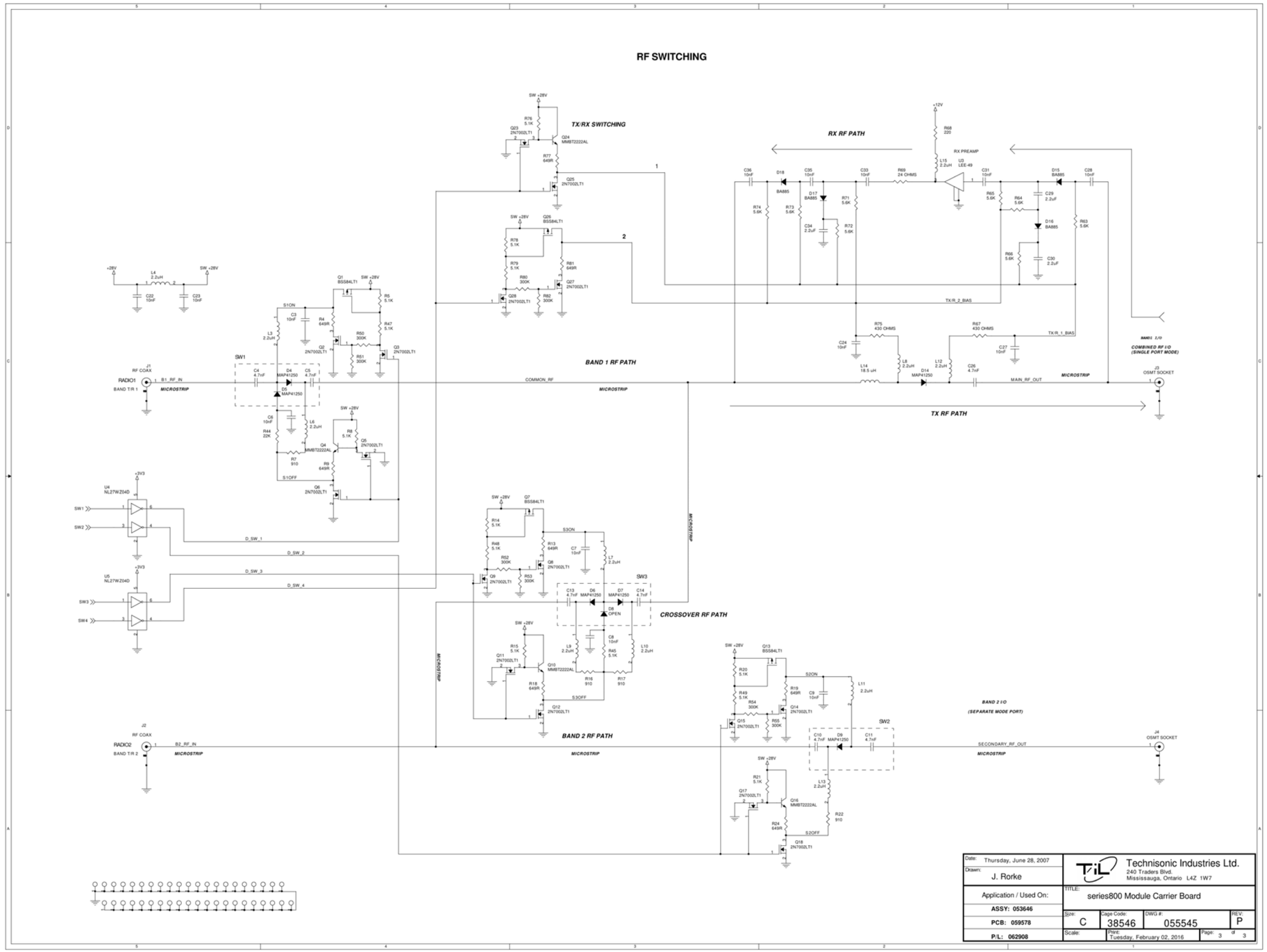
RF SWITCHING
TX/RX SWITCHING
RX RF PATH
BAND 1 RF PATH
TX RF PATH
CROSSOVER RF PATH
BAND 2 RF PATH
COMMON_RF
MAIN_RF_OUT
SECONDARY_RF_OUT
MICROSTRIP
COMBINED RF I/O (SINGLE PORT MODE)
BAND 2 I/O (SEPARATE MODE PORT)
RADIO1
RADIO2
RF COAX
OSMT SOCKET
Date: Thursday, June 28, 2007
Drawn: J. Rorke
Technisonic Industries Ltd.
240 Traders Blvd.
Mississauga, Ontario L4Z 1W7
Application / Used On:
ASSY: 053646
PCB: 059578
P/L: 062908
TITLE: series800 Module Carrier Board
Size: C
Cage Code: 38546
DWG #: 055545
REV: P
Scale:
Print: Tuesday, February 02, 2016
Page: 3 of 3

3.9 ANTENNA CONNECTOR BOARD

THIS DRAWING CONTAINS DESIGN AND OTHER INFORMATION WHICH ARE THE PROPERTY OF TECHNISONIC INDUSTRIES LIMITED. EXCEPT FOR RIGHTS EXPRESSLY GRANTED BY CONTRACT TO THE CANADIAN OR UNITED STATES GOVERNMENT THIS DRAWING MAY NOT, IN WHOLE OR IN PART, BE DUPLICATED OR DISCLOSED OR USED FOR MANUFACTURE OF PART DISCLOSED HEREIN, WITHOUT THE PRIOR WRITTEN PERMISSION OF:

TECHNISONIC INDUSTRIES LIMITED.

REVISIONS

LTR	DESCRIPTION	DATE	APPR.
A	ADDED EXTRA MTG HOLE. CR 08311	09/22/08	

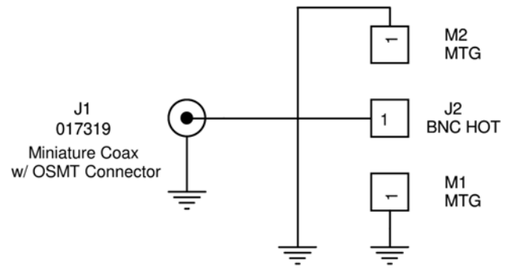

Tolerances:	Date: Thursday, November 22, 2001	Technisonic Industries Ltd. 240 Traders Blvd. E. Mississauga, Ontario L4Z 1W7			
ALL DIMENSIONS ARE IN INCHES UNLESS SPECIFIED OTHERWISE STATED #.# ----------> ± 0.1 #.## ----------> ± 0.01 #.### ----------> ± 0.001 ANGLES ----> 0.5° HOLE DIA. --> ±0.003	Drawn: J RORKE	TITLE: TDFM 600/6000 ANTENNA CONNECTOR BOARD			
Application / Used On: ASSY: 013525 ARTWK:019238 PL:012699		Size: A	Cage Code: 38546	DWG #: 015458A	REV: N/C
		Scale:	Print: 09/22/08	Page: 1 of 1	

SECTION 4

PCB LAYOUTS

This section provides the top and bottom layer views of the PCB's for identification of both the boards and the location of components on those boards.

Table 4-1 TDFM-136B Component Part Numbers – PCBs Highlighted.

Description	Assembly Number	Schematic Number	**PCB Number**	Parts List Number
Front Panel – DISPLAY Board	983371-3	985351	**989992**	982500-3
Front Panel - KEY PAD Board	053660-1	055551	**059583**	052857-1
Front Panel - MCU Board	053645-1	055547	**059580**	052853-1
Front Panel - DIN RISER Board	053673-1	035501	**059614**	052885-1
MAIN MCU Board	053662-1	055548	**059582**	052873-1
AUDIO Board – (ORIGINAL)	073710-1 H	075588 F	**079771 F**	072987-1 J
AUDIO Board – (NEW)	073710-1 L	075588 G	**079771 G**	072987-1 M
RF MODULE CARRIER Board	053646-1	055545	**059578**	062908-1
ANTENNA CONNECTOR Board	013525-2	015458	**019238**	012699-2

4.1 FRONT PANEL DISPLAY BOARD

The Front Panel display board top view is shown in figure 4-1 below. The Front Panel display board bottom view is shown in figure 4-2 below. Note that there are copper pours on the boards, these have been turned off so that individual traces and silkscreen (text and drawings) are visible in the black and white renderings.

As there was no change to the Display board between the TDFM-136B, and previous transceivers in the TDFM-136 family, this board is marked as TDFM-136.

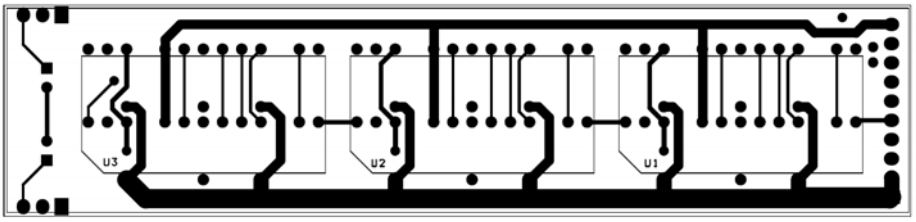

Figure 4-1: Front Panel Display board top view.

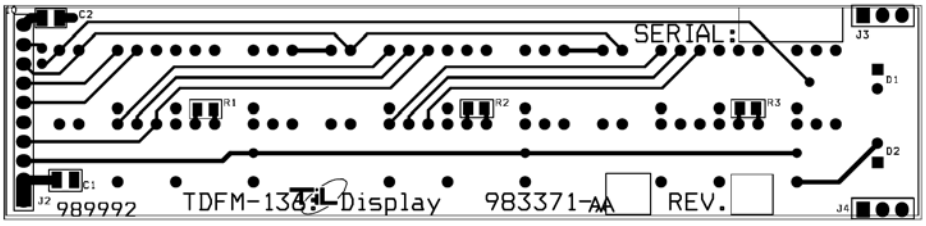

Figure 4-2: Front Panel Display board bottom view.

4.2 FRONT PANEL KEYPAD BOARD

The Front Panel keypad board top view is shown in figure 4-3 below, the bottom is shown in figure 4-4 below. Note that there are copper pours on the boards, these have been turned off so that individual traces and silkscreen (text and drawings) are visible in the black and white renderings.

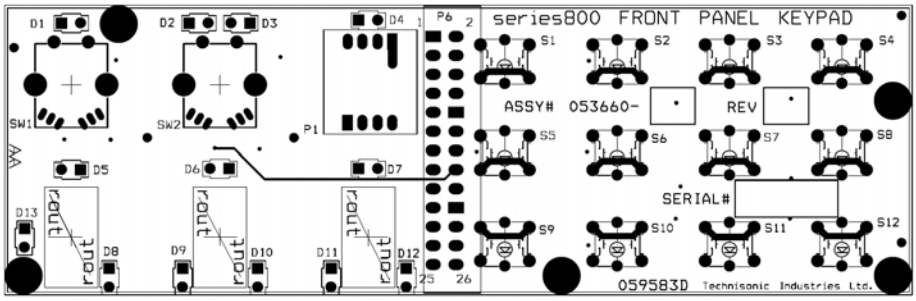

Figure 4-3: Front Panel Keypad board top view.

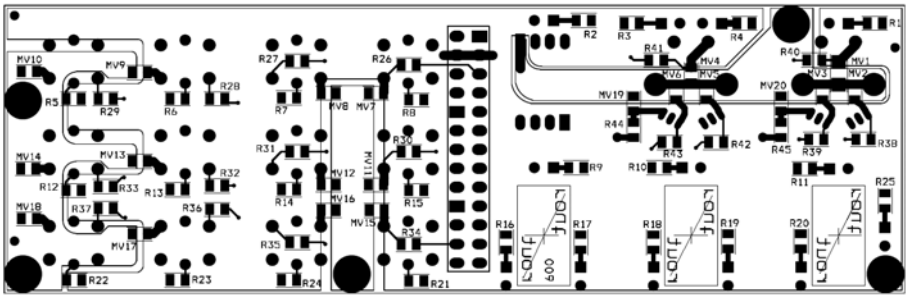

Figure 4-4: Front Panel Keypad board bottom view.

4.3 FRONT PANEL MCU BOARD

The Front Panel MCU board top silkscreen view is shown in figure 4-5 below, the bottom silkscreen is shown in figure 4-6 below. Note that there are copper pours on the boards, these have been turned off so that individual traces and silkscreen (text and drawings) are visible in the black and white renderings.

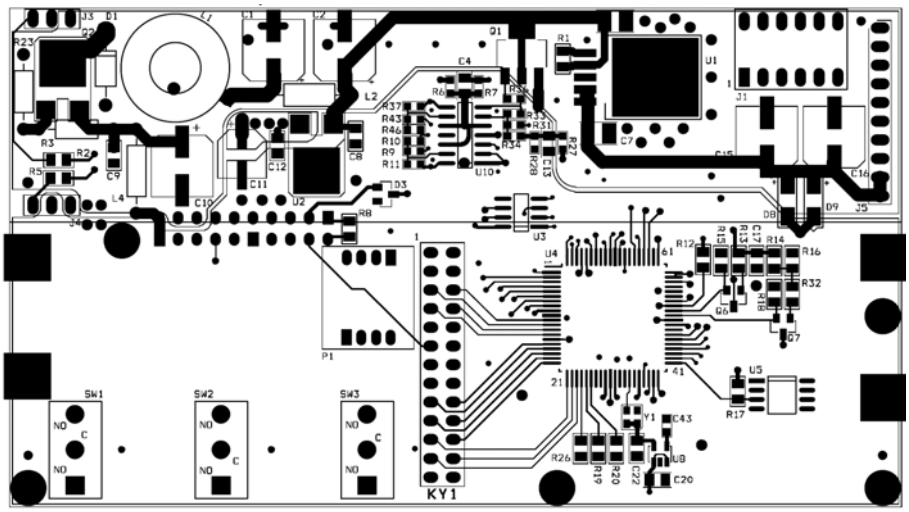

Figure 4-5: Front Panel MCU board top view.

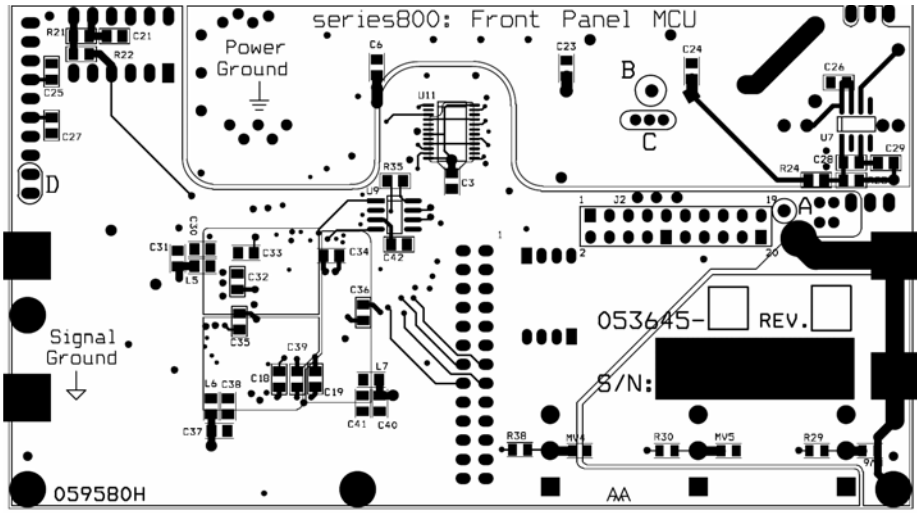

Figure 4-6: Front Panel MCU board bottom view.

4.4 FRONT PANEL DIN INTERFACE BOARD

The Front Panel DIN Interface board top and bottom silkscreen views are shown in figure 4-7 below. The top/component side view is shown on the left, and the bottom/solder side view is shown on the right. Note that there are copper pours on the boards, these have been turned off so that individual traces and silkscreen (text and drawings) are visible in the black and white renderings.

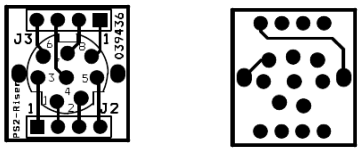

Figure 4-7: Front Panel DIN interface board top and bottom views.

4.5 ANTENNA CONNECTOR INTERFACE BOARD

The antenna connector interface board top and bottom views are shown in figure 4-8 below. Note that there are copper pours on the boards, these have been turned off so that individual traces and silkscreen (text and drawings) are visible in the black and white renderings.

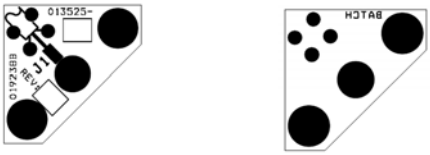

Figure 4-8: Antenna connector interface board top and bottom views.

4.6 MAIN MCU BOARD

The main MCU board silk view is shown in figure 4-9 below, the silk view is shown in figure 4-10 below. Note that there are copper pours on the boards, these have been turned off so that individual traces and silkscreen (text and drawings) are visible in the black and white renderings.

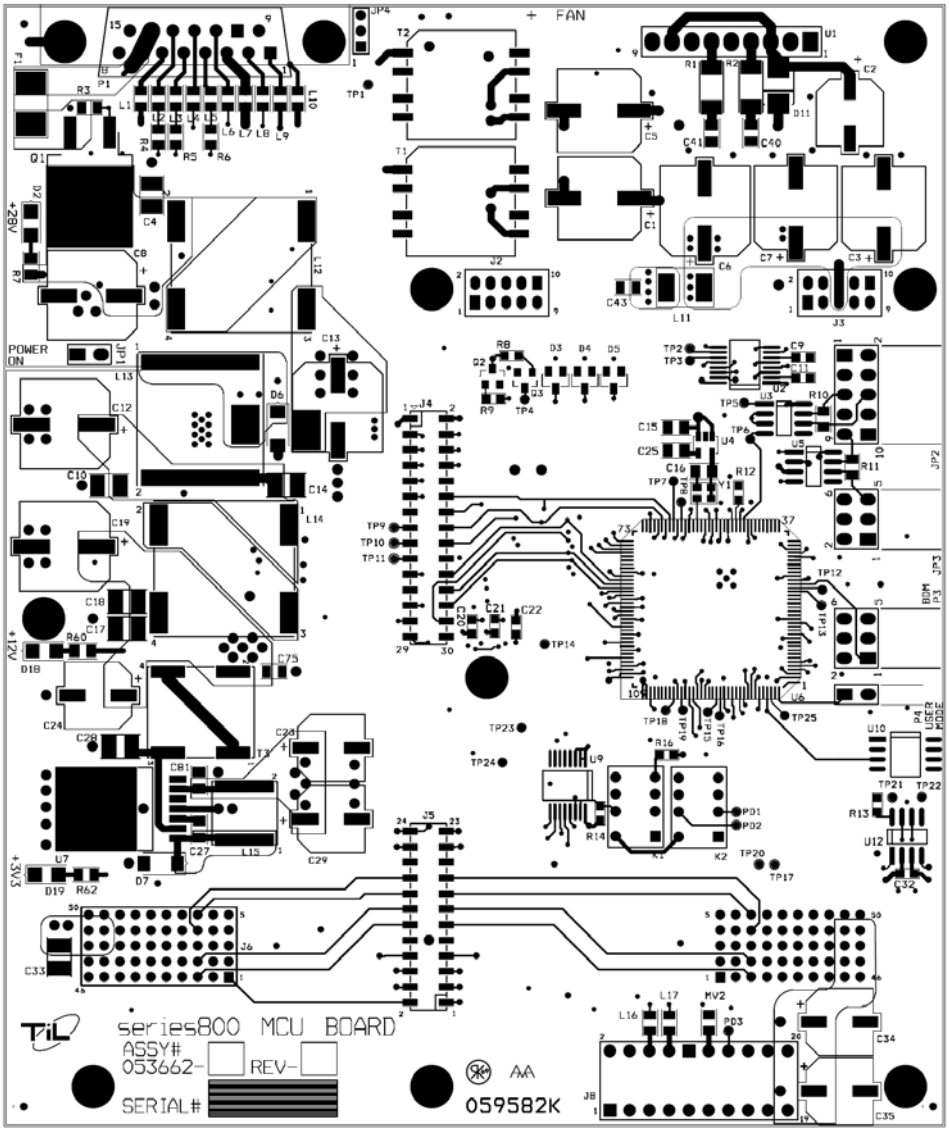

Figure 4-9: Main MCU board top view.

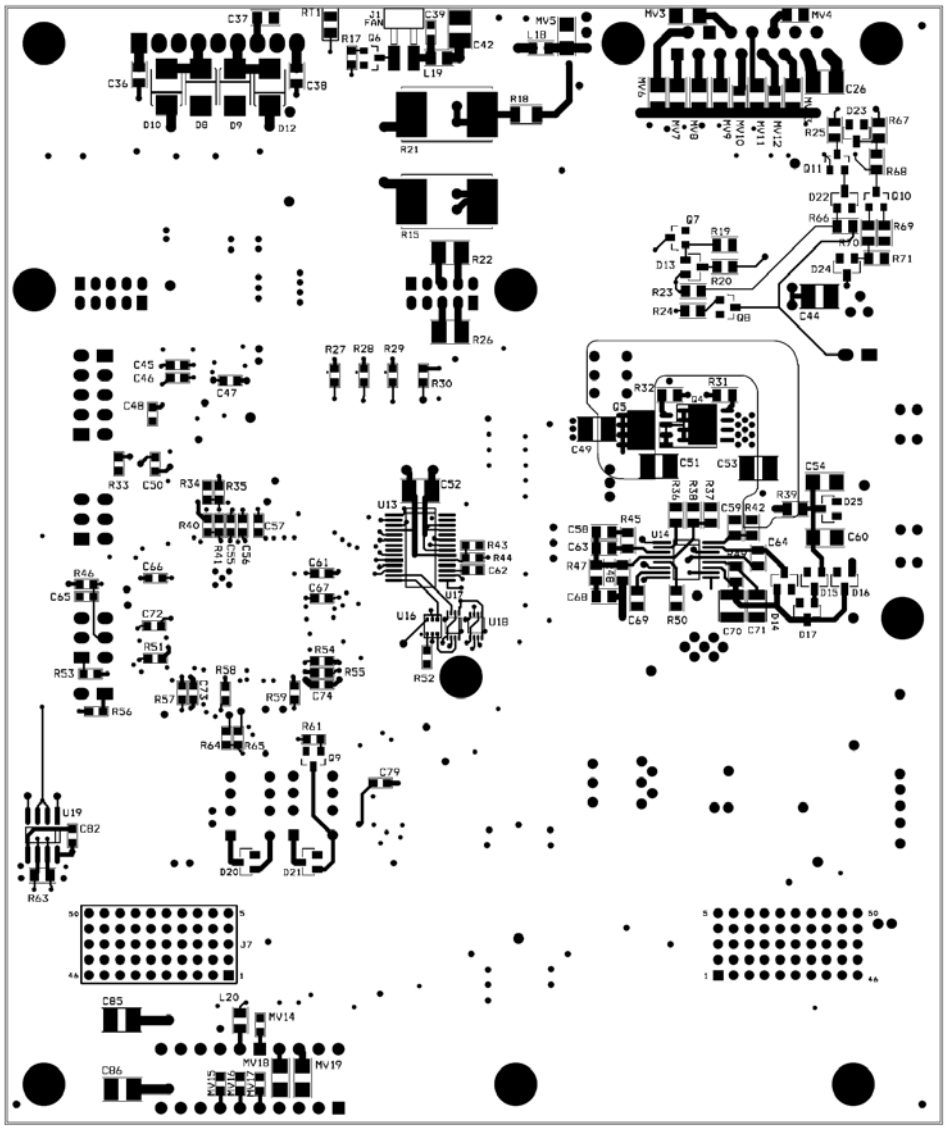

Figure 4-10: Main MCU board bottom view.

4.7 ANALOG AUDIO BOARD - ORIGINAL

There are two different versions of the Audio board that have been used in the TDFM-136B this re-design was due to part availability. There is no reason to replace the old board with the new one, as there is no performance difference, these are logically identical but physically distinct.

The original Audio board top silkscreen view is shown in figure 4-11 below, the bottom silkscreen view is shown in figure 4-12.

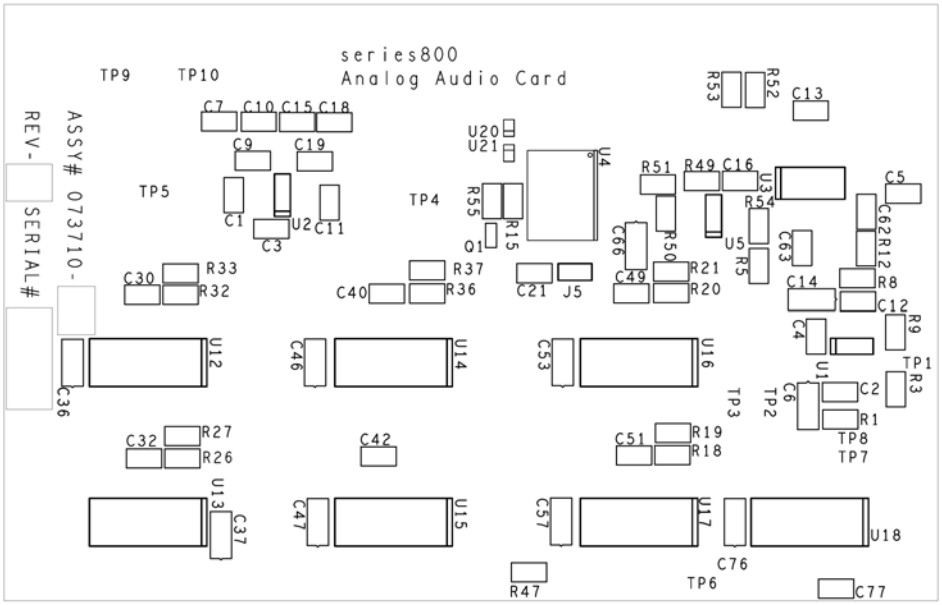

Figure 4-11: Audio board original design top view.

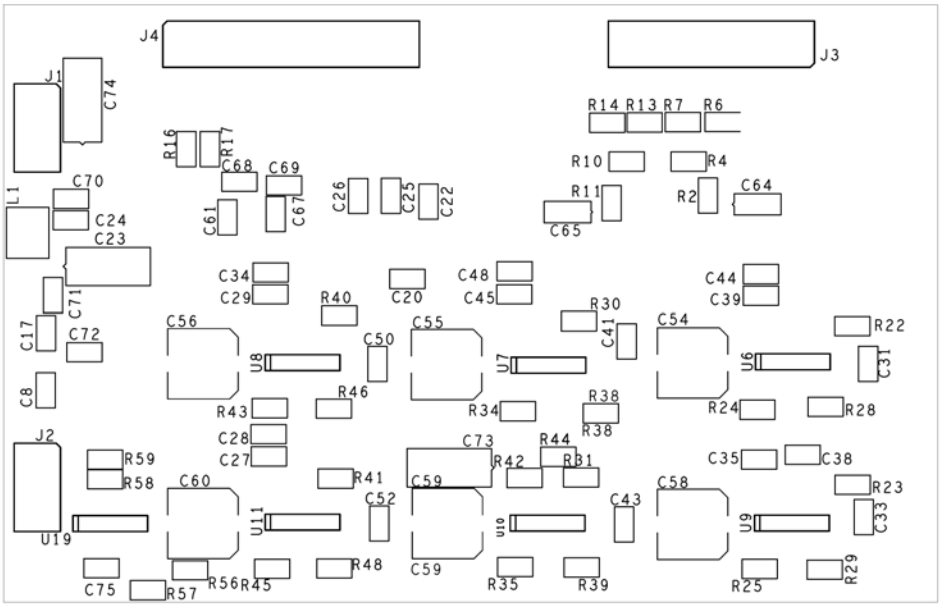

Figure 4-12: Audio board original design bottom view.

4.8 AUDIO BOARD – NEW

The new Audio board top silk view is shown in figure 4-13 below, the bottom silk view is shown in figure 4-14.

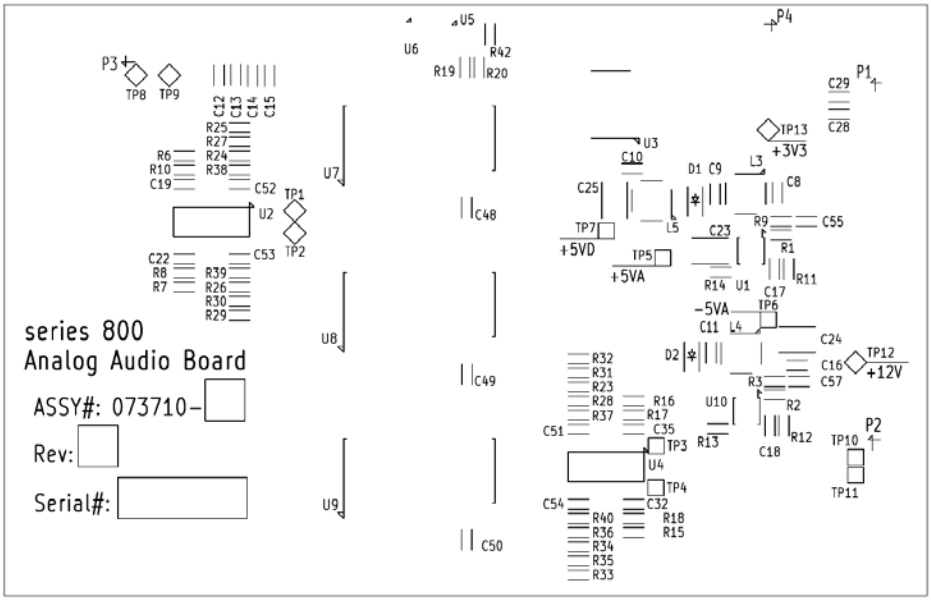

Figure 4-13: Audio board new design top view.

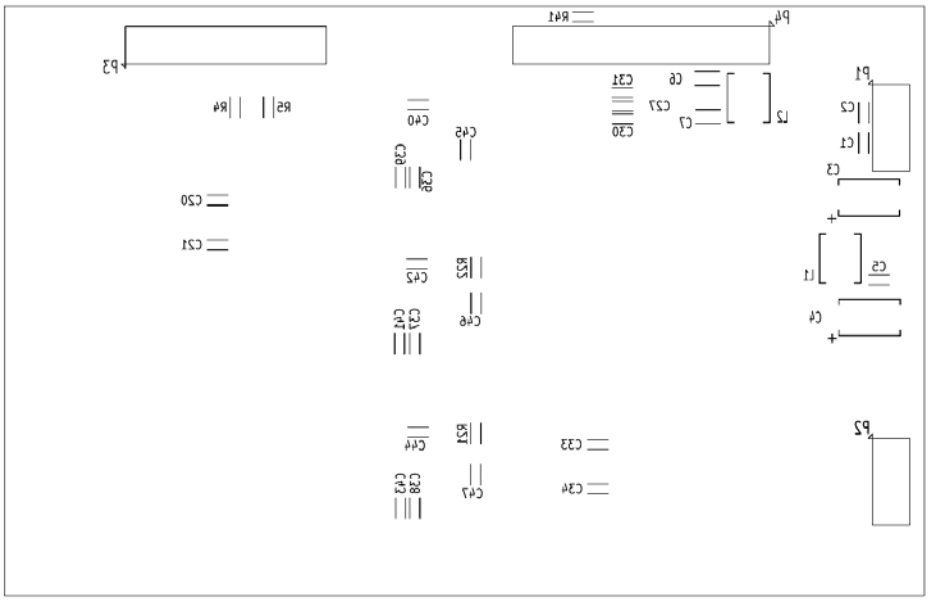

Figure 4-14: Audio board new design bottom view.

4.9 RF CARRIER BOARD

The RF carrier board top silk view is shown in figure 4-15 below, the bottom silk view is shown in figure 4-16. Note that there are copper pours on the boards, these have been turned off so that individual traces and silkscreen (text and drawings) are visible in the black and white renderings.

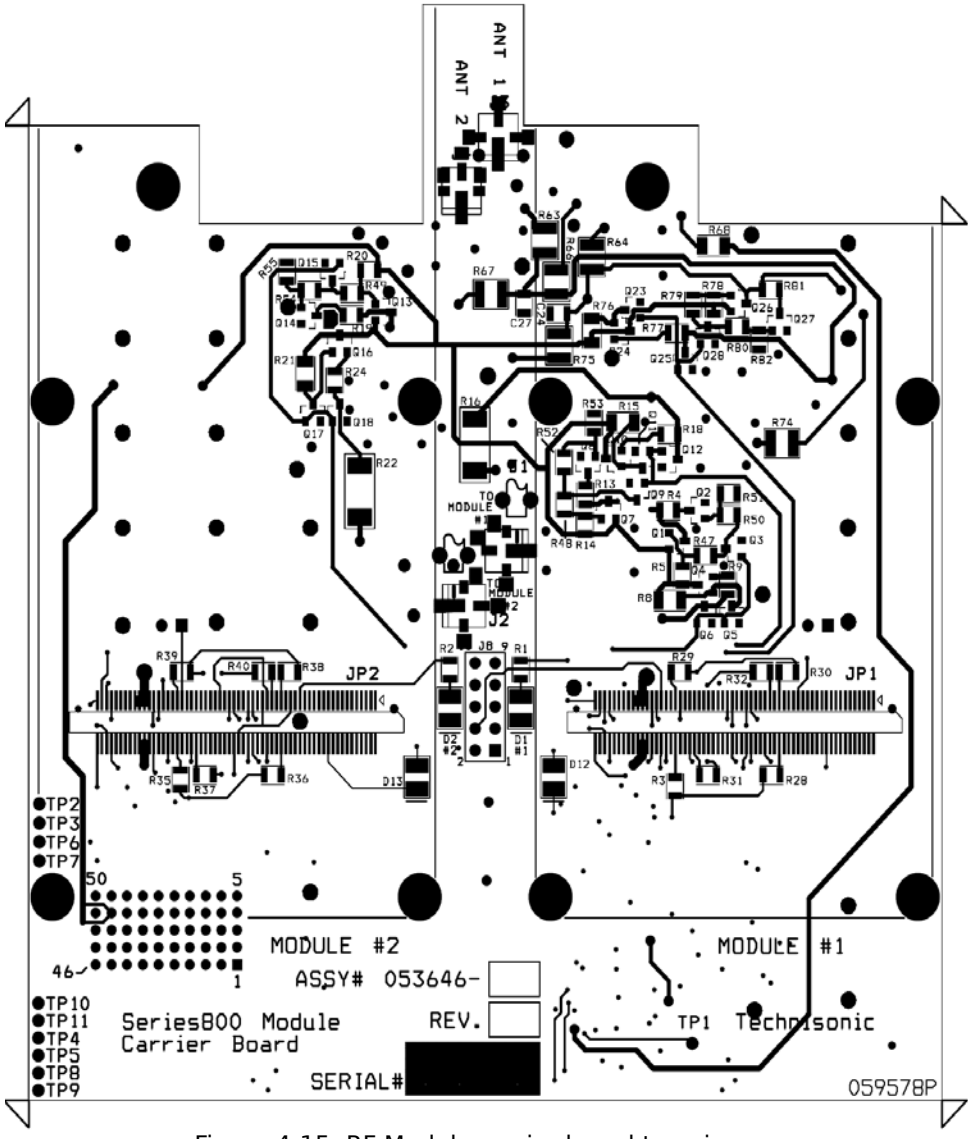

Figure 4-15: RF Module carrier board top view.

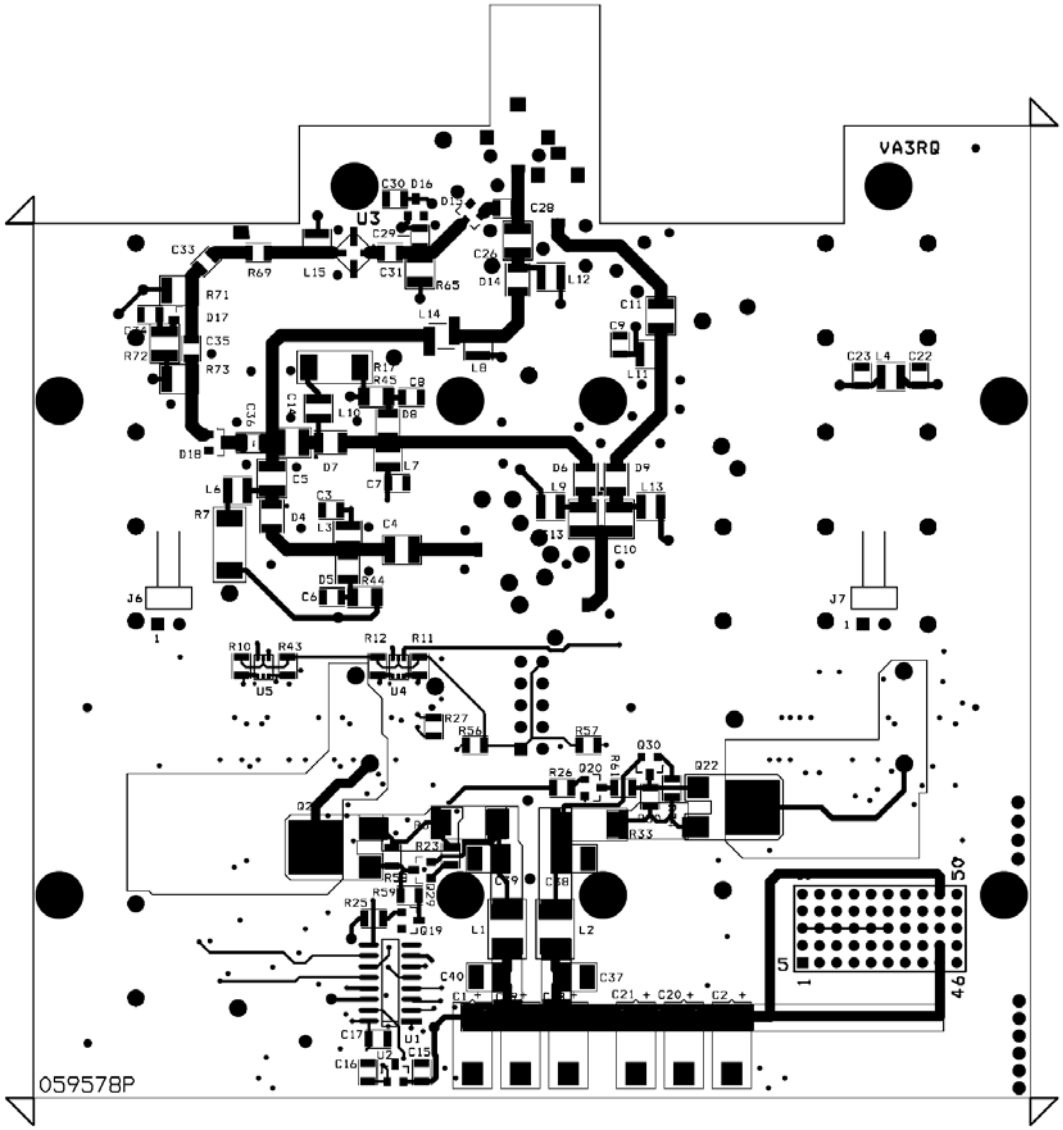

Figure 4-16: RF Module carrier board bottom view.

SECTION 5

PARTS LISTS

This section provides the parts lists for the TiL designed PCB's in the transceiver.

There are eight schematic diagrams used in the design of the TDFM-136B, and these are shown in table 5-1 below.

Table 5-1 TDFM-136B Component Number Matrix – Parts Lists Highlighted.

Description	Assembly Number	Schematic Number	PCB Number	**Parts List Number**
FINAL ASSEMBLY	081252-3-10	N/A	N/A	**082022-3-10**
Front Panel ASSEMBLY, GREEN	083729-1	N/A	N/A	**082018-1**
Front Panel ASSEMBLY, NV	083729-3	N/A	N/A	**082018-3**
Front Panel SUB-ASSEMBLY, GREEN	083728 -1	N/A	N/A	**082016-1**
Front Panel SUB-ASSEMBLY, NV	083728 -3	N/A	N/A	**082016-3**
HEATSINK ASSEMBLY, SINGLE ANTENNA	083734-1	N/A	N/A	**082021-1**
Front Panel - DISPLAY	983371-3	985351	989992	**982500-3**
Front Panel - KEY PAD	053660-1	055551	059583	**052857-1**
Front Panel - MCU	053645-1	055547	059580	**052853-1**
Front Panel - DIN RISER	053673-1	035501	059614	**052885-1**
MAIN MCU	053662-1	055548	059582	**052873-1**
AUDIO – ORIGINAL	073710-1 H	075588 F	079771 F	**072987-1 J**
AUDIO – NEW	073710-1 L	075588 G	079771 G	**072987-1 M**
RF MODULE CARRIER	053646-1	055545	059578	**062908-1**
ANTENNA CONNECTOR	013525-2	015458	019238	**012699-2**

5.1 FINAL ASSEMBLY: 082022-3-10

USED ON: TDFM-136B Final Assembly, NV, Single Antenna, No Encryption		**ASSEMBLY No:** 081252-3-10	**REV**
DATE: 16 SEP 2008	**ORIGINATOR:** Alex Upchurch	**PARTS LIST No:** 082022-3-10	M

Item	Qty	Reference	Part	Value	Parameters	Package	Manu	TiL Number	Lot #
1	1		ASSEMBLY	NV	TDFM-136B Front Panel Assy NV		TiL	083729 -3	
2	1		ASSEMBLY	Single	series800 Heatsink Assy (Single Antenna)		TiL	083734-1	
3	1		ASSEMBLY		series800 MCU Board Assy		TiL	053662-1	
4	1		ASSEMBLY		series800 Module Carrier Board Assy		TiL	053646-1	
5	1		ASSEMBLY		series800 Analog Audio Card Assy		TiL	073710-1	
6	2		ASSEMBLY		Nexus XR25-VP Module Final Assy		TiL	113861-1	
7	2		BLOCK		Nexus Heatsink Block		TiL	048674	
8	1		BLOCK		Audio Amp IC Heatsink Block		TiL	988456	
9	A/R		THERMAL COMPOUND				WAKEFIELD	120-2	
10	2		TRAY		series800 Universal Tray		TiL	058706	
11	2		LID		series800 Lid		TiL	078766	
12	1		SIDE PANEL		series800 Chassis Right Side Panel		TiL	068731	
13	1		SIDE PANEL		series800 Chassis Left Side Panel		TiL	068732	
14	2		STANDOFF		Long, Brass, #2-56		TiL	118897	
15	8		STANDOFF		Short, Brass, #2-56		TiL	118898	
16	4		STANDOFF		Hex, 3/16” x 1/2”, M-F		Any	8401MD	
17	4		DZUS FASTENER				DZUS	FDZSPFSC35-38ARB	
18	2		JACK SCREW		3/16” x 1/2”		Any	7230	
19	4		SCREW		4-40 X 1/4" CAP HEX BLACK OXIDE		ANY	4-40 X 1/4" CH BO	
20	32		SCREW		4-40 X 3/16" FLAT PHIL 100 DEG S/S		ANY	4-40 X 3/16" FP 100 S/S	

PARTS LIST No: 082022-3-10 **REV:** M									
Item	**Qty**	**Reference**	**Part**	**Value**	**Parameters**	**Package**	**Manu**	**TiL Number**	**Lot #**
21	4		SCREW		#4-40, 1/4”, FP 100 DEG, SS		Any	#4-40 x 1/4” FP 100 S/S	
22	3		SCREW		#4-40, 7/16”, PP, SS		Any	#4-40 x 7/16” PP S/S	
23	10		SCREW		#4-40, 1/4”, PP, SS		Any	#4-40 x 1/4” PP S/S	
24	14		SCREW		#2-56, 1/4", PP, SS		Any	#2-56 x 1/4” PP S/S	
25	14		WASHER		#2, SPLIT, SS		Any	No. 2	
26	13		WASHER		#4, SPLIT, SS		Any	No. 4	
27	1		CONNECTOR CAP		Plastic		POLAR	078789	
28	1		LABEL		TDFM-136B Serial Number		TiL	089845	
29	1		LABEL		TDFM-136B FCC ID		TiL	089846	
30	1		LABEL		Modification Record		TiL	989941	
31	1		LABEL		FCC Part 15		TiL	089851	
32	1		LABEL		FCC Part 15		TiL	089877	
33	2		GAP FILLER		THERMAL, 5MM		TiL	187573-1	
34	2		GAP FILLER		THERMAL, 5MM		TiL	187573-2	
35	2		GAP FILLER		THERMAL, 5MM		TiL	187573-3	

5.2 FRONT PANEL ASSEMBLY, GREEN: 082018-1

USED ON: TDFM-136B Front Panel Assembly - Green		**ASSEMBLY No:** 083729-1	**REV**
DATE: 09 SEP 2008	**ORIGINATOR:** Andrew MacDonald	**PARTS LIST No:** 082018-1	G

Item	Qty	Reference	Part	Value	Parameters	Package	Manu	TiL Number	Lot #
1	1		Button Set	TDFM-136	Plastic, 12pcs: 0-9, #, *		TiL	999070	
2	1		Assembly	PCB	Front Panel MCU		TiL	053645-1	
3	1		Assembly	PCB	Front Panel Keypad - Green		TiL	053660-1	
4	1		Assembly	PCB	Front Panel Display - Green		TiL	983371-3	
5	1		Assembly	PCB	DIN8 Riser		TiL	053673-1	
6	1		METAL		Front Panel Metal Plate		TiL	068736	
7	1		FILM		Clear		TiL	087423	
8	1		ESD SCREEN				TIL	128971	
9	A/R		LENS FRAME		ALUMINUM		TiL	138972	
10	A/R		LENS FRAME		ALUMINUM	THINNER	TiL	138972-1	
11	1		Front Panel		PLASTIC		TiL	087422	
12	1		LENS		GREEN, PLASTIC		TiL	938185-1	
13	3	SW1,SW2,SW3	SWITCH	TOGGLE	SPST, 5A@120VAC, ON-ON,,	SIP 3	C&K	7101SPDW3QE	
14	3		WASHER	FLAT	1/4” ID, 3/8”OD		GOULD	FSPEW-203	
15	5		SCREW	2-56	1/4”, PAN PHIL, S/S		ANY	2-56 X 1/4" PP S/S	
16	5		LOCKWASHER	#2	#2, S/S		ANY	LOCKWASHER, NO 2	
17	2		SCREW	4-40	5/16”, FLAT PHIL, BLK OXIDE, 100E		ANY	4-40 X 5/16" FP BO	
18	2		KNOB		ALUM, BLK ANNO, 1/8”		TiL	067405	
19	3		CAP		WHITE		C & K	706201	

5.3 FRONT PANEL ASSEMBLY, NV: 082018-3

USED ON: TDFM-136B Front Panel Assembly - NV		**ASSEMBLY No:** 083729-3	**REV**
DATE: 09 SEP 2008	**ORIGINATOR:** Andrew MacDonald	**PARTS LIST No:** 082018-3	G

Item	Qty	Reference	Part	Value	Parameters	Package	Manu	TiL Number	Lot #
1	1		Button Set	TDFM-136	Plastic, 12pcs: 0-9, #, *		TiL	999070	
2	1		Assembly	PCB	Front Panel MCU		TiL	053645-1	
3	1		Assembly	PCB	Front Panel Keypad - Green		TiL	053660-1	
4	1		Assembly	PCB	Front Panel Display = Green		TiL	983371-3	
5	1		Assembly	PCB	DIN8 Riser		TiL	053673-1	
6	1		METAL		Front Panel Metal Plate		TiL	068736	
7	1		FILM		NV		TiL	087424	
8	1		ESD SCREEN				TIL	128971	
9	A/R		LENS FRAME		ALUMINUM		TiL	148028	
10	1		Front Panel	"136B/NV"	PLASTIC		TiL	087425	
11	1		LENS		NV		TiL	108875	
12	3	SW1,SW2,SW3	SWITCH	TOGGLE	SPST, 5A@120VAC, ON-ON,,	SIP 3	C&K	7101SPDW3QE	
13	3		WASHER	FLAT	1/4” ID, 3/8”OD		GOULD	FSPEW-203	
14	5		SCREW	2-56	1/4”, PAN PHIL, S/S		ANY	2-56 X 1/4" PP S/S	
15	5		LOCKWASHER	#2	#2, S/S		ANY	LOCKWASHER, NO 2	
16	2		SCREW	4-40	5/16”, FLAT PHIL, BLK OXIDE, 100E		ANY	4-40 X 5/16" FP BO	
17	2		KNOB		ALUM, BLK ANNO, 1/8”		TiL	067405	
18	3		CAP		WHITE		C & K	706201	

5.4 FRONT PANEL SUB-ASSEMBLY, GREEN: 082016-1

USED ON: TDFM-136B Front Panel Sub-Assembly (Green)						**ASSEMBLY No:** 083728-1			**REV**
DATE: 09 SEP 2008			**ORIGINATOR:** Andrew MacDonald			**PARTS LIST No:** 082016-1			D
Item	**Qty**	**Reference**	**Part**	**Value**	**Parameters**	**Package**	**Manu**	**TiL Number**	**Lot #**
1	1		Panel	“136B”	Painted, Etched, Silk-screened		TiL	087422	
2	1		Lens	Green	Plastic		TiL	938185-1	
3	A/R		RTV		Silicon		DOW	RTV 3140	

5.5 FRONT PANEL SUB-ASSEMBLY, NV: 082016-3

USED ON: TDFM-136B Front Panel Sub-Assembly (NV)						**ASSEMBLY No:** 083728-3			**REV**
DATE: 09 SEP 2008			**ORIGINATOR:** Andrew MacDonald			**PARTS LIST No:** 082016-3			D
Item	**Qty**	**Reference**	**Part**	**Value**	**Parameters**	**Package**	**Manu**	**TiL Number**	**Lot #**
1	1		Panel	“136B/NV”	Painted, Etched, Silk-screened		TiL	087425	
2	1		Lens	NV			TiL	108875	
3	A/R		RTV		Silicon		DOW	RTV 3140	

5.6 FRONT PANEL DISPLAY: 982500-3

USED ON: series800 Front Panel Display Board - Green		**ASSEMBLY No:** 983371-3	**REV**
DATE: 27 AUGUST 2008	**ORIGINATOR:** Andrew MacDonald	**PARTS LIST No:** 982500-3	F

Item	Qty	Reference	Part	Value	Parameters	Package	Manu	TiL Number	Lot #
1	1		PCB				CRIMP	989992	
2	2	C1,C2	CAPACITOR	100n	CER,50V,5%,X7R,	SM 0805	CALCHIP	GMC21X7R104K50NT	
3	2	D1,D2	DIODE	T1	LED, GREEN	T1	MULTICOMP	MCL514GD	
4	1	J2	CONNECTOR	HDR 1x10	MALE, 10 PIN, 0.1"	SIP 10	SAMTEC	MTSW-110-08-L-S-300	
5	2	J3,J4	CONNECTOR	HDR 1x3	MALE, 3 PIN, 0.1"	SIP 3	SAMTEC	MTSW-103-08-L-S-300	
6	3	R1,R2,R3	RESISTOR	4k7	FILM, 62m5W, 5%	SM 0805		CRCW0805 472	
7	3	U1,U2,U3	LED DISPLAY	292X	2x8 CHAR, GREEN	CUSTOM	AVAGO	HCMS-2923	

5.7 FRONT PANEL KEYPAD: 052857-1

Used On: Series800 Front Panel Keypad			**Assembly No:** 053660-1	**Rev**
Date: 14 Nov 2007	**Originator:** Andrew Macdonald		**Parts List No:** 052857-1	J

Item	Qty	Reference	Part	Value	Parameters	Package	Manu	Til Number	Lot #
1	1		Pcb	059583			Crimp	059583	
2	13	D1,D2,D3,D4,D5,D6,D7,D8, D9, D10,D11,D12,D13	Diode	Led	Green, 525nm, 200mcd,,	Radial	Avago	Hlmp-Pm00-N0000	
3	1	MV1	Mov	33v	Cer, 72vc,0.4j,550pf@1mhz,	Sm 1206	Harris	V33mla1206	
4	19	MV2,MV3,MV4,MV5,MV6,MV7, MV8,MV9,MV10,MV11,MV12, MV13,MV14,MV15,MV16,MV17, MV18,MV19,MV20	Mov	5.5v	Cer,13vc,0.3j,2n53f@1mhz,	Sm 0805	Littelfuse	V5.5mla0805	
5	1	P1	Connector	Donotfit				Donotfit	
6	1	P6	Connector	Hdr 2x13	Male,26,Pcb,0.1",	Hdr 2x13	Samtec	Mtsw-113-07-G-D-150	
7	12	R5,R6,R7,R8,R12,R13,R14,R15, R21,R22,R23,R24	Resistor	1k5	Film,62m5w,5%,,	Sm 0805		Crcw0805152	
8	17	R26,R27,R28,R29,R30,R31, R32,R33,R34,R35,R36,R37, R38,R39,R41,R42,R43	Resistor	1k0	Film,62m5w,5%,,	Sm 0805		Crcw0805 102	
9	1	R40	Resistor	10r	Film,62m5w,5%,,	Sm 0805		Crcw0805 100	
10	13	R1,R2,R3,R4,R9,R10,R11,R16, R17,R18,R19,R20,R25	Resistor	100r	Film,62m5w,5%,,	Sm 0805		Crcw0805101	
11	2	R44, R45	Resistor	51r	Film,62m5w,5%,,	Sm 0805		Crcw0805510	
12	2	Sw2,Sw1	Encoder	Em11b16140a 4	Rotary, 11mm,		Alps	Em11b16140a4	
13	12	S1,S2,S3,S4,S5,S6,S7,S8, S9,S10,S11,S12	Switch	Sw_Pb_Led	Push,Momentary,Led,Grn,		Til	037345-1	

5.8 FRONT PANEL MCU: 052853-1

USED ON: series800 Front Panel MCU Board (055547)		**ASSEMBLY No:** 053645-1	**REV**
DATE: 13 JUN 2008	**ORIGINATOR:** Andrew MacDonald	**PARTS LIST No:** 052853-1	L

Item	Qty	Reference	Part	Value	Parameters	Package	Manu	TiL Number	Lot #
1	4	C1,C2,C15,C16	CAPACITOR	220u	ELEC,35V,,,	SM_8m0x10m5	NIC	NACK221M35V8x10.5	
2	5	C3,C4,C13,C20,C22	CAPACITOR	4u7	CER,16V,10%,X7R,-55/+125	SM 0805	Murata	GCM21BR71C475KA73L	
3	2	C5,C7	CAPACITOR	22u	CER,16V,20%,X5R,	SM 1210	PANASONIC	ECJ4YB1C226M	
4	13	C6,C8,C12,C23,C24,C30, C31,C35-C37,C38,C40,C41	CAPACITOR	1u0	CER,25V,10%,X5R,	SM 0805	PANASONIC	ECJ2FB1E105K	
5	9	C9,C17,C18,C19,C26, C32,C34,C39,C42	CAPACITOR	100n	CER,50V,5%,X7R,	SM 0805	CALCHIP	GMC21X7R104K50NT	
6	1	C10	CAPACITOR	100u	ELEC,50V,,,	SM_8m0x10m5	NIC	NACK101M50V8x10.5	
7	1	C11	CAPACITOR	220u	ELEC,16V,,,	SM_6m3x8m0	NIC	NACK221M16V6.3x8.0	
8	3	C21,C29, C33	CAPACITOR	1n0	CER,50V,5%,COG,	SM 0805	NOVACAP	0805N102J500N	
9	1	C25	CAPACITOR	150p	CER,50V,5%,,	SM 0805	CALCHIP	GMC21CG151J50N	
10	1	C27	CAPACITOR	82p	CER,100V,10%,COG,	SM 0805	NOVACAP	GMC21CG820J100N	
11	1	C28	CAPACITOR	22p	CER,50V,5%,COG,	SM 0805	NOVACAP	0805N220J500N	
12	1	C43	CAPACITOR	10n	CER,50V,,,	SM 0603	Any	0603B103K500NT	
13	1	D1	DIODE	MUR115	RECTIFIER,1A,,,	AXIAL	ON	MUR115	
14	1	D3	DIODE	MMBD914L	SWITCHING,200mA,VR 70V,,	SOT-23	ON	MMBD914LT1	
15	2	D8,D9	DIODE	MRA4003T3G	RECTIFIER,1A,VR 400V,,	SM_403A	ON	MRA4003T3G	
16	1	J1	CONNECTOR	HDR 2x6	FEMALE,12,PCB,0.1",	DIP 12	SAMTEC	BCS-106-L-D-HE	
17	1	J2	CONNECTOR	HDR 2x10	MALE,20 pin,0.1",length,	DIL 20	SAMTEC	TSW-110-14-G-D	
18	2	J3, J4	CONNECTOR	HDR 1x3	FEMALE, 3, PCB, 0.1",	SIP 3	3M	929850-01-03-10	
19	1	J5	CONNECTOR	HDR 1x10	FEMALE, 10, PCB, 0.1",	SIP 10	3M	929850-01-10-10	
20	1	KY1	CONNECTOR	HDR 2x13	Female, 26-pin, 0.1", low profile	DIP 26	SAMTEC	SLW-113-01-G-D	
21	2	P1a,P1b	CONNECTOR	HDR 1x4	FEMALE,8,PCB,0.1",	HDR 1x4	SAMTEC	SQT-104-01-F-S	

series800 Front Panel MCU - PARTS LIST No: 052853-1 **REV:** L									
Item	**Qty**	**Reference**	**Part**	**Value**	**Parameters**	**Package**	**Manu**	**TiL Number**	**Lot #**
22	1	L1	INDUCTOR	700u	1A,,,,	TOROID	TIL	947101	
23	1	L2	INDUCTOR	1u0H	2A,WIRE,,,	AXIAL	Miller	70F106AI	
24	1	L4	INDUCTOR	5u6H	600mA,WIRE,,,	AXIAL	Miller	70F566AI	
25	3	L5,L6,L7	INDUCTOR BEAD	600R@100MHz	FERRITE,200mA,,,	SM 0805	STEWARD	HZ0805E601R-00	
26	3	MV4,MV5,MV6	MOV	5.5V	CER,13Vc,0.3J,2n53F@1MHz	SM 0805	Littelfuse	V5.5MLA0805	
27	1	Q1	TRANSISTOR	PZT2222AT1	NPN,600mA,1W5,,	TO-225		PZT2222AT1	
28	1	Q2	TRANSISTOR	SUD50P06-15	P-FET, 60V, 50A, 113W, RdsON 0.015	TO-252	Vishay	SUD50P06-15	
29	2	Q6,Q7	TRANSISTOR	MMBT2222AL	NPN,600mA,,,	SOT 23		MMBT2222ALT1	
30	8	R1,R12,R15,R16,R18,R29, R30, R38	RESISTOR	10k	FILM,62m5W,5%,,	SM 0805		CRCW0805 103	
31	2	R2,R5	RESISTOR	100r	FILM,62m5W,5%,,	SM 0805		CRCW0805 101	
32	1	R3	RESISTOR	390r	FILM,250mW,5%,,	AXIAL	DALE	SFR25HJ 390	
33	9	R9,R10,R11,R31,R33,R34,R37,R43,R46	RESISTOR	47k	FILM,62m5W,5%,,	SM 0603		CRCW0603 473	
34	2	R6,R7	RESISTOR	10k	FILM,62m5W,5%,,	SM 0603		CRCW0603 103	
35	1	R8	RESISTOR	120r	FILM,62m5W,5%,,	SM 0805		CRCW0805 121	
36	2	R13,R32	RESISTOR	1k0	FILM,62m5W,5%,,	SM 0805		CRCW0805 102	
37	4	R14,R19,R20,R24	RESISTOR	47k	FILM,62m5W,5%,,	SM 0805		CRCW0805 473	
38	3	R17,R21,R22	RESISTOR	4k7	FILM,62m5W,5%,,	SM 0805		CRCW0805 472	
39	1	R23	RESISTOR	620r	FILM,250mW,5%,,	AXIAL		SFR25HJ 621	
40	1	R25	RESISTOR	9k1	FILM,62m5W,5%,,	SM 0805		CRCW0805 912	
41	1	R26	RESISTOR	2k2	FILM,62m5W,5%,,	SM 0805		CRCW0805 222	
42	1	R27	RESISTOR	7k5	FILM,62m5W,5%,,	SM 0603		CRCW0603 752	
43	1	R28	RESISTOR	1k8	FILM,62m5W,5%,,	SM 0603		CRCW0603 182	
44		R35	RESISTOR		Do Not Fit				
45	1	R36	RESISTOR	1k	FILM,62m5W,5%,,	SM 0603		CRCW0603 102	

series800 Front Panel MCU - PARTS LIST No: 052853-1 **REV:** L									
Item	**Qty**	**Reference**	**Part**	**Value**	**Parameters**	**Package**	**Manu**	**TiL Number**	**Lot #**
46	1	U1	REGULATOR	LP3856-5.0	5V,3A,LINEAR,600mV,-40 +125	TO-263-5	NATIONAL	LP3856ES-5.0	
47	1	U2	REGULATOR	MC33275-5.0	5V,300mA,LINEAR,260mV,-40 +85	DPAK	ON	MC33275DT-5.0G	
48	1	U3	INTERFACE	ADM485	RS485,5V,,,	SOG 8	Analog Devices	ADM485S	
49	1	U4	IC	MC9S12XEQ512	CPU12X, 1M Flash, 64K RAM, 4K EEPROM, -40 / +85	LQFP-144	Freescale	MC9S12XEQ512	
50	1	U5	MEMORY	DS2433	EEPROM,4kbit,2.8-6.0V,,	SOG 8	DALLAS	DS2433S+	
51	1	U7	REGULATOR	LM2578AM	SWITCHING,,,,	SOG 8	NATIONAL	LM2578AM	
52	1	U8	IC	LP2985-18DBV	V Reg, 1V8, 150ma, LDO,	SOT-23-5	TI	LP2985-18DBV	
53		U9	IC		Do Not Fit				
54	1	U10	OP AMP	MC33079	AUDIO,LOW NOISE,,,	SOG 14	MOTOROLA	MC33079D	
55	1	U11	Integrated Circuit	X9251UV24IZ-2.7	50k,20%,50mW,ePot,	TSSOP-24	Xicor	X9251UV24IZ-2.7	
56	1	Y1	CRYSTAL	3.6864 MHz.	1u0W,50ppm,-40/+85,,	SM Custom	EPSON	ECS-2018-036-BN	
57	5		STANDOFF		2-56, Brass		Intergral	018585	
58	4		MT BLOCK		4-40, Brass, Swage		Globe	B-23010-105	
59	A/R		RTV				Dow Corning	RTV-162	
60	A/R		Lacing Cord				Any	Lacing Cord	
61	1		PCB				CRIMP	059580	

5.9 FRONT PANEL DIN RISER: 052885-1

USED ON: DIN8 Riser Board			**ASSEMBLY No:** 053673-1	**REV**
DATE: 28 SERP 2005	**ORIGINATOR:** Andrew MacDonald		**PARTS LIST No:** 052885-1	B

Item	Qty	Reference	Part	Value	Parameters	Package	Manu	TiL Number	Lot #
1	1		PCB				CRIMP	059614	
2	1	J1	CONNECTOR	DIN8	FEMALE, 8pin, PCB, SOLDER	CUSTOM	CUI	MD-80SV	
3	2	P1, P2	CONNECTOR	HDR1x4	MALE, 4pin, 2mm	SIP	SAMTEC	MTMM-104-09-S-S-370	

5.10 MAIN MCU: 052873-1

USED ON: series800 MCU Board			**ASSEMBLY No:** 053662-1	**REV**
DATE: 11 MAY 2005	**ORIGINATOR:** Steve McIntosh		**PARTS LIST No:** 052873-1	T

Item	Qty	Reference	Part	Value	Parameters	Package	Manu	TiL Number	Lot #
1	7	C10, C14, C17, C18, C28, C42, C70	CAPACITOR	22u	CER,16V,,,	SM 1210	Panasonic	ECJ-4YB1C226M	
2	2	C12, C19	CAPACITOR	470u	ELEC,25V,,,	SM CYLINDER	NIC	NACK471M25V10X10.5F	
3	4	C15, C16, C75, C81	CAPACITOR	4u7	CER,16V,,,	SM 0805	Panasonic	ECJ-2FF1C475Z	
4	2	C1, C5	CAPACITOR	330u	ELEC,35V,,,	SM CYLINDER	NIC	NACK331M35V10X10.5F	
5	3	C23, C24, C29	CAPACITOR	330u	ELEC,25V,,,	SM CYLINDER	NIC	NACK331M25V8X10.5F	
6	2	C25, C27	CAPACITOR	10n	CER,200V,,,	SM 0805	Any	0805B103K201NT	
7	3	C2, C34, C35	CAPACITOR	100u	ELEC,50V,,,	SM CYLINDER	NIC	NACK101M50V8X10.5F	
8	2	C36, C38	CAPACITOR	220n	CER,25V,10%,,	SM 0805	Panasonic	ECJ-2FB1E224K	
9	2	C37, C43	CAPACITOR	100n	CER,50V,,,	SM 0805	Any	0805B104K500NT	
10	2	C40, C41	CAPACITOR	22n	CER,100V,5%,X7R,	SM 0805	Any	0805B223J101NT	
11	10	C4, C26, C33, C44, C49, C51, C52,C53,C85,C86	CAPACITOR	10u	CER,50V,,,	SM 1210	Panasonic	ECJ-4YFIH106Z	
12	2	C54, C60	CAPACITOR	220n	CER,50V,,,	SM 1206	Panasonic	ECJ-3YB1H224K	
13	2	C58, C69	CAPACITOR	1n0	CER,50V,,,	SM 0805	Any	0805N102J500NT	
14	2	C59, C64	CAPACITOR	220n	CER,50V,,,	SM 0805	Panasonic	ECJ-2VF1H224Z	
15	1	C63	CAPACITOR	470p	CER,50V,,,	SM 0805	Any	0805N471J500NT	
16	1	C68	CAPACITOR	2n2	CER,50V,,,	SM 0805	Any	0805N222J500NT	
17	1	C71	CAPACITOR	1u0	CER,25V,10%,,	SM 1206	Panasonic	ECJ-3YBIE105K	
18	5	C3, C6-C8, C13	CAPACITOR	220u	ELEC,50V,,,	SM CYLINDER	NIC	NACK221M50V10X10.5F	
19	22	C9, C11, C20-C22, C39, C45-C48, C55-C57, C61, C62, C65-C67, C72-C74, C79	CAPACITOR	100n	CER,50V,,,	SM 0603	Any	0603B104K500NT	
20		C32, C50, C82	CAPACITOR	Do Not Fit					

series800 MCU - PARTS LIST No: 052873-1 **REV:** T									
Item	**Qty**	**Reference**	**Part**	**Value**	**Parameters**	**Package**	**Manu**	**TiL Number**	**Lot #**
21	1	D13	DIODE	BAW56	Dual, 300mA, 350mW, HS General Purpose,	SOT-23	Diodes Inc	BAW56-7-F	
22	1	D14	DIODE	BAS 19	200mV,250mW,General Purpose,,	SOT 23	Nxp	BAS19LT1	
23	5	D15-D17, D20, D21	DIODE	MMBD914	200mV,225mW,HS Switching,,	SOT 23	On Semi	MMBD914LT1	
24	3	D2, D18, D19	DIODE	LED	LED,,,,	SM 1206	Lite-On	LTST-C150GKT	
25	3	D3-D5	DIODE	BZX84C3V3	ZENER,3.3V,350mW,,	SOT 23	Diodes Inc	BZX84C3V3-7-F	
26	2	D6, D7	DIODE	B1100-13	Schottky,100V,1A,,	SMA	Diodes Inc	B1100-13	
27	5	D8-D12	DIODE	MURS115	Ultrafast Rectifier,1A,150V,,	SMB 403A	On Semi	MURS115T3G	
28	1	D22	DIODE	MMBZ5231B	Zener, 5V1, 225mW	SOT-23	On Semi	MMBZ5231B	
29	2	D23, D25	DIODE	MMBZ5242B	Zener, 12V, 225mW	SOT-23	On Semi	MMBZ5242B	
30	1	D24	DIODE	MMBZ5256B	Zener, 30V, 225mW	SOT-23	On Semi	MMBZ5256B	
31	1	F1	FUSE	R452005	5A, Slow-Blow,,,		Littlefuse	R452005	
32	1	J1	HEADER	HEADER 1X2	2 pin,0.1",RA,,		SAMTEC	TSM-102-02-L-SH	
33	2	J2, J3	SOCKET	SOCKET 5X2	10 pin,2mm,dual row,,		SAMTEC	SQW-105-01-L-D	
34	1	J4	SOCKET	SOCKET 15X2	2mm,SM Socket,,,		SAMTEC	SQW-115-01-L-D-VS-A	
35	1	J5	SOCKET	SOCKET 12X2	2mm,SM Socket,,,		SAMTEC	SQW-112-01-L-D-VS-A	
36		J6	SOCKET	SOCKET 5x10	Do Not Fit				
37	1	J7	SOCKET	SOCKET 5x10	2mm,Tail Socket,,,		SAMTEC	SQT-110-01-L-5	
38	1	J8	SOCKET	SOCKET 2x10	20pin,0.1",RA,,		SAMTEC	BCS-110-L-D-HE	
39	1	JP1	HEADER	HEADER 1X2	2 pin,90 degree hdr,0.1",,		Berg	78299-102	
40	1	JP2	HEADER	HEADER 5X2	10 pin,0.1",RA,,		SAMTEC	MTSW-105-08-G-D-230-RA	
41	1	JP3	HEADER	HEADER 3X2	6 pin,0.1",RA,,		SAMTEC	TSW-103-08-S-D-RA	
42	2	K1, K2	RELAY	RELAY DPDT	1A@30Vdc,2 Form-C,,,		NAIS	AGQ20012	
43	1	L11	INDUCTOR	3u3	Ferrite,1.4A,10%,,	SM 1812FS	Coilcraft	1812FS-332KLC	
44	1	L12	INDUCTOR	CHOKE	Choke,Comn Mode,1.47 mH,2.80 A,80 mOhm	LCCI-50	Pulse	P0351	
45	1	L13	INDUCTOR	PE-53653	16.1uH,5.1A,27.2mOhm,,	LCI-50	Pulse	PE-53653	

series800 MCU - PARTS LIST No: 052873-1 **REV:** T									
Item	**Qty**	**Reference**	**Part**	**Value**	**Parameters**	**Package**	**Manu**	**TiL Number**	**Lot #**
46	1	L14	INDUCTOR	CHOKE	Choke,Comn Mode,0.59 mH,5.60 A,21 mOhm	LCCI-50	Pulse	P0353	
47	1	L15	INDUCTOR	PE-53600	6.3uH,1.4A,59.5 mOhm,,		Pulse	PE-53600	
48	15	L1-L10, L16-L20	INDUCTOR	HZ0805E601R	600R@100MHz,0.3R@DC,500mA,,	SM 0805	Steward	HZ0805E601R-10	
49	2	MV15, MV16	MOV		0.06pF @ 250MHz	SM 0603	Littelfuse	PGB1010603MR	
50	2	MV14, MV17	MOV	5.5V	CER, 17.5Vc, 0.1J, 760pF@1MHz,	SM 0603	Littlefuse	V5.5MLA0603	
51	3	MV7, MV9, MV11	MOV	33V	CER,72Vc,0.4J,550pF@1MHz,	SM 1206	HARRIS	V33MLA1206	
52	4	MV2, MV4, MV10, MV12	MOV	3.5V	CER,13Vc,0.3J,2n53F@1MHz,	SM 0805	Littelfuse	V3.5MLA0805	
53	7	MV3, MV5, MV6, MV8, MV13, MV18, MV19	MOV	14V	CER,33Vc,0.4J,1n4F@1MHz,	SM 1206	HARRIS	V14MLA1206	
54	1	P1	CONNECTOR	DB15-M	MALE,15pin,,,	DSUB	Amphenol	FCC17A15PA-44B	
55		P2	HEADER	Do Not Fit					
56	1	P3	HEADER	HEADER 3X2	6 pin,0.1",RA		SAMTEC	TSW-103-08-S-D-RA	
57	1	P4	HEADER	HEADER 1X2	2 pin,0.1\u201d,RA,,		Berg	78299-102	
58	1	Q1	TRANSISTOR	SUM90P10-19L	P-FET, 100V, 90A, 375W, RdsON 0.019	TO-263	Vishay	SUM90P10-19L-E3	
59	4	Q3, Q6, Q7, Q9	TRANSISTOR	MMBT2222AL	SS, NPN, 40V, 600ma,	SOT 23	OnSemi	MMBT2222ALT1G	
60	4	Q2, Q8, Q10, Q11	TRANSISTOR	MMBT5551L	SS, NPN, 160V, 600ma,	SOT 23	OnSemi	MMBT5551LT1G	
61	2	Q4, Q5	TRANSISTOR	SI7852DP	FET, Low RDS on,,,		Vishay	SI7852DP-T1-E3	
62		R11,R13, R22, R33-R35, R40, R41, R51, R58,R63							
63	13	R12, R14, R16, R30, R43, R46, R53-R56, R59, R64, R65	RESISTOR	10K	FILM,62m5W,5%,,	SM 0603	Any	CRCW0603103	
64	1	R52	RESISTOR	0R0	FILM,62m5W,5%,,	SM 0603	Any	CRCW06030000	
65	3	R27-R29	RESISTOR	1K	FILM,62m5W,5%,,	SM 0603	Any	CRCW0603102	
66	4	R8, R9, R17, R61	RESISTOR	2K7	FILM,62m5W,5%,,	SM 0603	Any	CRCW0603272	
67	2	R44, R57	RESISTOR	4k7	FILM,62m5W,5%,,	SM 0603	Any	CRCW0603472	

68	2	R31, R32	RESISTOR	5R6	FILM,62m5W,5%,,	SM 0805	Any	CRCW08055R6	
69	1	R49	RESISTOR	10R	FILM,125mW,5%,,	SM 0805	Any	CRCW0805100	
70	3	R4-R6	RESISTOR	51R	FILM,62m5W,5%,,	SM 0805	Any	CRCW0805510	

series800 MCU - PARTS LIST No: 052873-1 **REV:** T

Item	Qty	Reference	Part	Value	Parameters	Package	Manu	TiL Number	Lot #
71	2	R42, R47	RESISTOR	100R	FILM,62m5W,5%,,	SM 0805	Any	CRCW0805101	
72	1	R10	RESISTOR	120R	FILM,125mW,5%,,	SM 0805	Any	CRCW0805121	
73	1	R62	RESISTOR	270R	FILM,125mW,5%,,	SM 0805	Any	CRCW0805271	
74	1	R60	RESISTOR	510R	FILM,62m5W,5%,,	SM 0805	Any	CRCW0805511	
75	1	R7	RESISTOR	1K5	FILM,62m5W,5%,,	SM 0805	Any	CRCW0805152	
76	3	R19, R20, R24	RESISTOR	2K7	FILM,62m5W,5%,,	SM 0805	Any	CRCW0805272	
77	3	R23, R25, R66	RESISTOR	4k7	FILM,62m5W,5%,,	SM 0805	Any	CRCW0805472	
78	1	R69	RESISTOR	5k1	FILM,62m5W,5%,,	SM 0805	Any	CRCW0805512	
79	2	R37, R71	RESISTOR	9K1	FILM,62m5W,5%,,	SM 0805	Any	CRCW0805912	
80	1	R45	RESISTOR	10K	FILM,62m5W,5%,,	SM 0805	Any	CRCW0805103	
81	3	R3, R39, R50	RESISTOR	12K	FILM,62m5W,5%,,	SM 0805	Any	CRCW0805123	
82	2	R67, R68	RESISTOR	20k	FILM,62m5W,5%,,	SM 0805	Any	CRCW0805203	
83	1	R36	RESISTOR	27K	FILM,62m5W,5%,,	SM 0805	Any	CRCW0805273	
84	2	R38, R70	RESISTOR	56K	FILM,62m5W,5%,,	SM 0805	Any	CRCW0805563	
85	1	R48	RESISTOR	110K	FILM,62m5W,5%,,	SM 0805	Any	CRCW0805114	
86	1	R18	RESISTOR	0R0	Rmax=20mOhm,Imax=3.5A@70C,,,	SM 1206	Any	CRCW12060000Z0EA	
87	2	R1, R2	RESISTOR	6R8	Metal Film,0W5,5%,,	SM 2010	NIC	NRC50J6R8TRF	
88	1	R26	RESISTOR	470R	FILM,330mW,5%,,	SM 1210	Any	RMC 1/4 470R	
89	2	R15, R21	RESISTOR	1R0	Metal Strip,2W,5%,,	SM WSR2	Vishay	WSR21R000FEA	
90	1	RT1	Thermistor	KR103G0J	10K,5%,K=3750,,	SM 0805	US Sensor	KR103G0J	
91	1	T1	Transformer	77367	8:600 Ohm,150Hz to 75KHz,1W @ 1KHz,,		Pico Elec	77367	
92		T2	Transformer	Do Not Fit					
93	1	T3	INDUCTOR	P0473	Choke, Comn Mode,0.88 mH,1.63 A,110 mOhm	Polecat	Pulse	P0473	

94	1	U1	AMPLIFIER	TDA2615	AUDIO,POWER,,,	SIP 10	PHILIPS	TDA2615U	
95	1	U10	IC	DS2433S+	4kb,1-wire EEPROM,,,	SOIC-8	Dallas Semi	DS2433S+	

series800 MCU - PARTS LIST No: 052873-1 **REV:** T

Item	Qty	Reference	Part	Value	Parameters	Package	Manu	TiL Number	Lot #
96	1	U13	IC	FT245RL	USB FIFO IC,w/ChipID,,,	SSOP-28	FTDI	FT245RL	
97	1	U14	REGULATOR	LTC3703EGN	Switching Reg,,,,	SOG 16	Linear Tech	LTC3703EGN#PBF	
98	1	U16	IC	NL27WZ04D	Dual Inverter,,,,	SOT 363	ON Semi	NL27WZ04DFT2	
99	2	U17, U18	IC	NL27WZ32USG	OR,2 INPUT,DUAL,,	SM US8	On Semi	NL27WZ32USG	
10	1	U2	IC	MAX3232EEAE	RS232,3V,,,	SOG 16/W	MAXIM	MAX3232EEAE+	
101	1	U3	IC	ADM3485EARZ	RS485,3V,,,	SOG 16/W	Analog Devices	ADM3485EARZ	
102	1	U4	IC	LP2985-18DBV	V Reg, 1V8, 150ma, LDO,	SOT-23-5	TI	LP2985-18DBV	
103		U5, U12, U19	IC	Do Not Fit					
104	1	U6	IC	MC9S12XEP100	CPU12X,1M Flash,64K RAM,4K EEPROM,-40 / +85	LQFP144	Freescale	MC9S12XEP100CAG	
105	1	U7	REGULATOR	LM2676S-3.3	3V3,LINEAR,3A0,,	TO-263	National Semi	LM2676S-3.3/NOPB	
106	1	U9	IC	74AHC139PW	Demux,2-to-4,,,	TSSOP-16	TI	SN74HC139PWR	
107	1	Y1	OSC	3.6864MHz	Oscillator, 3.686400 MHz,,,	SMD 2x2.5	ECS	ECS-2018-036-BN	
108	1		PCB		series800 MCU Board		Any	059582	
109	6		JUMPER		0.1"		Any	68786-102	
110	A/R		RTV				Any	RTV-162	

5.11 ANALOG AUDIO (ORIGINAL): 072987-1

The original design of the Analog Audio board ended at revision J, shown here.

USED ON: series800 Analog Audio Card (original)						**ASSEMBLY No:** 073710-1			**REV**
DATE: 02 AUG 2007		**ORIGINATOR:** Alex Upchurch				**PARTS LIST No:** 072987-1			J
Item	**Qty**	**Reference**	**Part**	**Value**	**Parameters**	**Package**	**Manu**	**TiL Number**	**Lot #**
1	3	C70,C71,C72	CAPACITOR	100p	CER,50V,,,	SM 0805	Any	0805B101K500NT	
2	10	C1,C2,C11,C12,C27,C29, C35,C39,C45,C67	CAPACITOR	470p	CER,50V,5%,COG,	SM 0805	Any	0805N471J500N	
3	28	C3,C4,C8,C9,C17,C19,C24,C28 , C30-C34,C38,C40-C44, C48-C52,C61,C68,C75,C77	CAPACITOR	100n	CER,50V,5%,COG,	SM 0805	Any	0805N104J500N	
4		C5,C7,C10,C13,C15,C16,C18, C20,C21,C25,C26,C62,C62,C69	CAPACITOR	220n	CER,25V,10%,,	SM 0805	Panasonic	ECJ2FB1E224K	
5	1	C22	CAPACITOR	1u0	CER,25V,10%,,	SM 0805	Panasonic	ECJ-2FB1E105K	
6	12	C6,C14,C36,C37,C46,C47,C53, C57,C64-C66,C76	CAPACITOR	4u7	TANT,16V,10%,,	SM 1206	Kemet	T491A475K016AS	
7	3	C23,C73,C74	CAPACITOR	100u	TANT,20V,20%,,	SM 7343	Kemet	T491X107M020AS	
8	6	C54,C55,C56,C58,C59,C60	CAPACITOR	220u	ELEC,16V,,,	SM CYLINDER	NIC	NACK221M16V8X6.5F	
9	2	J1,J2	HEADER	5X2	10 pin,2mm,dual row,,		SAMTEC	MTMM-105-09-G-D-390	
10	1	J3	HEADER	12X2	24 pin,2mm,dual row,,		SAMTEC	MTMM-112-08-G-D-340	
11	1	J4	HEADER	15X2	30 pin,2mm,dual row,,		SAMTEC	MTMM-115-08-G-D-340	
12		J5	HEADER	DNF	Do Not Fit,,,,				
13	1	L1	INDUCTOR	100u	Ferrite, 260ma,10%	SM 1812FS	Coilcraft	1812FS-104KLC	
14	1	Q1	TRANSISTOR	MMBT2222AL	Small Signal, NPN, 40V, 600ma	SOT-23	On-Semi	MMBT2222ALT1G	
15	2	R52,R54	RESISTOR	0R0	FILM,Rmax=20mOhm,Imax=2.5A @ 70C	SM 0805	Any	CRCW08050R0	
16	1	R51	RESISTOR	100R	FILM,62m5W,5%,,	SM 0805	Any	CRCW 0805 101	
17	1	R36	RESISTOR	390R	FILM,62m5W,5%,,	SM 0805	Any	CRCW 0805 391	
18	4	R5,R6,R12,R13	RESISTOR	1k0	FILM,62m5W,5%,,	SM 0805	Any	CRCW 0805 102	
19	2	R18,R20	RESISTOR	1k8	FILM,62m5W,5%,,	SM 0805	Any	CRCW 0805 182	
20	1	R47	RESISTOR	2k7	FILM,62m5W,5%,,	SM 0805	Any	CRCW 0805 272	

series800 Analog Audio Card (original) **PARTS LIST No:** 072987-1 **REV:** J									
Item	**Qty**	**Reference**	**Part**	**Value**	**Parameters**	**Package**	**Manu**	**TiL Number**	**Lot #**
21	12	R3,R4,R7,R9,R10,R14,R19, R21,R27,R33,R37,R49	RESISTOR	4k7	FILM,62m5W,5%,,	SM 0805	Any	CRCW 0805 472	
22	27	R16,R17,R22,R23-R25, R28-R31,R34,R36,R38-R46, R48,R55-R59	RESISTOR	10k	FILM,62m5W,5%,,	SM 0805	Any	CRCW 0805 103	
23	1	R50	RESISTOR	12k	FILM,62m5W,5%,,	SM 0805	Any	CRCW 0805 123	
24	2	R26,R32	RESISTOR	13k	FILM,62m5W,5%,,	SM 0805	Any	CRCW 0805 133	
25	2	R2,R11	RESISTOR	24k	FILM,62m5W,5%,,	SM 0805	Any	CRCW0805 243	
26	2	R1,R8	RESISTOR	68k	FILM,62m5W,5%,,	SM 0805	Any	CRCW 0805 683	
27		R15,R53	RESISTOR	DNF	Do Not Fit,,,,				
28	3	U1,U2,U5	OP AMP	MC33078	AUDIO, LOW NOISE, Dual,,	SOG 8	On Semi	MC33078D	
29	1	U3	IC	X9251UV24I-2.7	50k, 20%, 50mW, ePot,	TSSOP-24	Intersil	X9251UV24IZ-2.7	
30	1	U4	IC	ISD4003	Chip Corder,4 min,8kHz,,	TSSOP-28	Winbond	ISD4003-04MEYI	
31	7	U6-U11,U19	OP AMP	MC33079	AUDIO, LOW NOISE, Quad,,	SOG 14	ST Micro	MC33079D	
32	7	U12-U18	ATTENUATOR	LM1973	AUDIO, DIGITAL,,,	SOG 20	NATIONAL	LM1973M	
33	1	U20	IC	NL27WZ04DF	Dual Inverter	SOT-363	On Semi	NL27WZ04DFT2	
34	1	U21	IC	MC74VHC1G01DF	2-Input NAND, Open Collector	SOT-353	On Semi	MC74VHC1G01DFT1G	
35	1		PCB					079771	
36	A/R		RTV					RTV-162	

5.12 AUDIO (NEW): 072987-1 (REV. K & UP)

The first production release of the new Analog Audio board is revision M, shown here.

USED ON: series800 Analog Audio Card (new)						**ASSEMBLY No:** 073710-1			**REV**
DATE: 16 DEC 2019		**ORIGINATOR:** Andrew MacDonald				**PARTS LIST No:** 072987-1			M
Item	**Qty**	**Reference**	**Part**	**Value**	**Parameters**	**Package**	**Manu**	**TiL Number**	**Lot #**
1	2	C1, C5,	Capacitor	100p	50V	SM_1608_m	any	06035A101JAT2A	
2	9	C2, C8, C9, C10, C11, C16, C48, C49, C50,	Capacitor	1u0	16V	SM_1608_m	any	06035C105KAT2	
3	2	C3, C4,	Capacitor	100u	20V	SM_7343_m	any	T491X107M020AT	
4	2	C6, C7,	Capacitor	10u	16V	SM_2012_m	any	0805YD106KAT2A	
5	9	C12, C13, C14, C15, C27, C28, C29, C30, C31,	Capacitor	220n	25V	SM_1608_m	any	06033C224KAT2A	
6	20	C17, C18, C20, C21, C33, C34, C36, C37, C38, C39, C40, C41, C42, C43, C44, C45, C46, C47, C55, C57,	Capacitor	100n	50V	SM_1608_m	any	06035C104KAT2A	
7	8	C19, C22, C32, C35, C51, C52, C53, C54,	Capacitor	470p	50V	SM_1608_m	any	06035C471KAT2A	
8	3	C23, C24, C25,	Capacitor	22u	16V	SM_3225_m	any	1210YD226MAT2A	
9	2	D1, D2,	Diode	MBR0530T1G	0.5A	SOD-123	ON Semi	MBR0530T1G	
10	1	L1,	Inductor	100uH	260mA	SM_250x450_m	Coilcraft	1812FS-104KLC	
11	1	L2,	Inductor	10uH	710mA	SM_1812FS	Coilcraft	1812FS-103KLC	
12	3	L3, L4, L5,	Inductor	4u7H	650mA	SM_LPD4012	Coilcraft	LPD4012-472MR	
13	2	P1, P2,	Connector	HDR_2x5M		HDR_2x5_2mm	Samtec	MTMM-105-09-G-D-390	
14	1	P3,	Connector	HDR_2x12M		HDR_2x12_2mm	Samtec	MTMM-112-08-G-D-340	
15	1	P4,	Connector	HDR_2x15M		HDR_2x15_2mm	Samtec	MTMM-115-08-G-D-340	
16	1	R1,	Resistor	45.3k	100mW	SM_1608_m	any	CRCW060345K3FKEA	
17	1	R2,	Resistor	60.4k	100mW	SM_1608_m	any	CRCW060360K4FKEA	
18	3	R3, R21, R22,	Resistor	100k	100mW	SM_1608_m	any	CRCW0603100KJNEA	
19	2	R4, R5,	Resistor	4k7	100mW	SM_1608_m	any	CRCW06034K70JNEA	
20	4	R6, R7, R15, R16,	Resistor	1k0	100mW	SM_1608_m	any	CRCW06031K00JNEA	

series800 Analog Audio Card (new) **PARTS LIST No:** 072987-1 **REV:** M									
Item	**Qty**	**Reference**	**Part**	**Value**	**Parameters**	**Package**	**Manu**	**TiL Number**	**Lot #**
21	2	R8, R10,	Resistor	24k	100mW	SM_1608_m	any	CRCW060324K0JNEA	
22	1	R9,	Resistor	187k	100mW	SM_1608_m	any	CRCW0603187KJNEA	
23	2	R11, R12,	Resistor	56.2k	100mW	SM_1608_m	any	CRCW060356K2FKEA	
24	17	R13, R14, R23, R24, R25, R26, R27, R28, R29, R30, R31, R32, R33, R34, R35, R36, R42	Resistor	10k	100mW	SM_1608_m	any	CRCW060310K0JNEA	
25	2	R17, R18,	Resistor	68k	100mW	SM_1608_m	any	CRCW060368K0JNEA	
26	1	R19,	Resistor	33k	100mW	SM_1608_m	any	CRCW060333K0JNEA	
27	1	R20,	Resistor	18k	100mW	SM_1608_m	any	CRCW060318K0JNEA	
28	2	R37, R40,	Resistor	1k8	100mW	SM_1608_m	any	CRCW06031K80JNEA	
29	2	R38, R39,	Resistor	13k	100mW	SM_1608_m	any	CRCW060313K0JNEA	
30	1	R41,	Resistor	0r		SM_1608_m	any	CRCW06030000Z0EA	
31	2	U1, U10,	Regulator	LT8570	Switching	MSOP-8	AnalogDev	LT8570EMS8E#PBF	
32	2	U2, U4,	OpAmp	MC33079	Quad	SOIC-14	NXP	MC33079DR2G	
33	1	U3,	Digital Pot	X9251	Quad	TSSOP-24	Renesis	X9251UV24IZ-2.7	
34	1	U5,	NAND	74VHC1G01	Single	SC-70-5	NXP	MC74VHC1G01DFT1G	
35	1	U6,	Inverter	NL27WZ04	Dual	SC-70-6	ON Semi	NL27WZ04DFT2G	
36	3	U7, U8, U9,	Attenuator	PGA4311	Quad	SOIC-28	T.I.	PGA4311U	
37	1		PCB					079771	
38	A/R		RTV					RTV-162	

5.13 RF MODULE CARRIER: 062908-1

Used On: Series800 RF Module Carrier Board			**Assembly No:** 053646-1	**Rev**
Date: 02 Oct 2006	**Originator:** Jon Rorke		**Parts List No:** 062908-1	Ac

Item	Qty	Reference	Part	Value	Parameters	Package	Manu	Til Number	Lot #
1	1	Pcb	059578		4 Layers Fr-4		Crimp	059578	
2		C1,C2,C18,C19,C20,C21	Dnf	100uf	Tant./ 16 V/Low Profile	Sm/7343_12			
3	7	C4,C5,C10,C11,C13,C14,C26	Capacitor	4.7nf	Ceramic / 50v	Sm/1210	Atc	700b472jw50xt	
4	14	C3,C6,C7,C8,C9,C22,C23,C24, C27,C28,C31,C33,C35,C36	Capacitor	10nf	50 V 10%	Sm/0805	Any	0805b103k500n	
5		C37,C38,C39,C40	Capacitor	Dnf		Sm/0805			
6	3	C15,C16,C17	Capacitor	100nf	50v 5%	Sm/0805	Any	Gmc21x7r104k50nt	
7	3	C29,C30,C34	Capacitor	2.2uf	25v	Sm/0805	Any	Ecj-2ff1e225z	
8	4	D1,D2,D12,D13	Led		Green	Sm/1206	Liteon	Ltst-C150gkt	
9	6	D4,D5,D6,D7,D9,D14	Pin Diode		50v 4w	Sm/1072	Ma/Com	Map4p1250	
10		D8	Pin Diode	Dnf	Map4p1250, 50v, 4w	Sm/1072	Ma/Com		
11	4	D15,D16,D17,D18	Pin Diode		Pin, Surface Mount	Sot-23	Infenion	Ba 885e6327t	
12	2	JP1,JP2	Connector		Fx8c-Mating Surface Mount/ 120 Pins		Hirose	Fx8c-120p-Sv	
13	1	J1	Coax Cable		Series800 Coax Cable Assy.		Til	087428-1	
14	1	J2	Coax Cable		Series800 Coax Cable Assy.		Til	087428-2	
15	2	J3, J4	Connector		Osmt Socket	Osmt Socket	Ma/Com/ Tyco	1055687-1	
16	1	J5	Header		Header 40 Pins(4x10)		Samtec	Mtmm-110-06-G-Q-180	
17	1	J5	Header		Header 10 Pins(1x10)		Samtec	Mtmm-110-06-G-S-180	
18	2	J6,J7	Header		Rh Header 2 Pins	Male,Pcb.01" Ra	Samtec	69191-102	
19	1	J8	Socket		Box Con. 2x5 Pins	Male,Pcb.01"	Samtec	Ssw-105-01-S-D-Ll	
20	2	L1,L2	Bead	Filter	Ferrite Bead/ 6a	Sm1812	Fair-Riite	2518121217y6	

series800 RF Module Carrier Board - PARTS LIST No: 062908-1 **REV:** AC									
Item	**Qty**	**Reference**	**Part**	**Value**	**Parameters**	**Package**	**Manu**	**TiL Number**	**Lot #**
21	11	L3,L4,L6,L7,L8,L9,L10,L11,L12, L13,L15	INDUCTOR	2.2uH		SM/1012	COILCRAFT	1008CS-222XKBB	
22	1	L14	INDUCTOR	18.5 nH	Surface Mount		COILCRAFT	A05TGLC	
23	4	Q1,Q7,Q13,Q26	FET		P CHNNEL FET / 60 V	SM/SOT23	ONSEMI	BSS84LT1	
24	16	Q2,Q3,Q5,Q6,Q8,Q9,Q11,Q12, Q14,Q15,Q17,Q18,Q23,Q25, Q27,Q28	FET		N CHNNEL FET / 60 V	SM/SOT23	ONSEMI	2N7002LT1	
25	6	Q4,Q10,Q16,Q19,Q20,Q24	TRANSISTOR		SIGNAL,NPN,40V,600ma	SM/SOT23	ONSEMI	MMBT2222AL	
26	2	Q21,Q22	FET		FET P CHANNEL	DPAK	ONSEMI	SUD50P06-15-GE3	
27		Q29,Q30	TRANSISTOR	DNF	DO NOT FIT - PNP	SM/SOT23			
28	2	R1,R2	RESISTOR	510 OHMS	1/8 W 5%	SM/0805	ANY	CRCW0805511	
29		R3,R29,R31,R35,R37,R39	DNF	0 OHMS	1/8 W 5%	SM/0805	ANY		
30	6	R28,R30,R32,R36,R38,R40	RESISTOR	0 OHMS	1/8 W 5%	SM/0805	ANY	RC11-0	
31	2	R6,R33	RESISTOR	0 OHMS	1W 1%	SM2512	ANY	CRCW25120000EG	
32	1	R69	RESISTOR	24 OHMS	1/10 W 5%	SM/0805	ANY	CRCW0805240	
33	1	R27	RESISTOR	120 OHMS	1/8 W 5%	SM/0805	ANY	CRCW0805121	
34	2	R56,R57	RESISTOR	200 OHMS	1/8 W 5%	SM/0805	ANY	CRCW0805201	
35	1	R68	RESISTOR	220 OHMS	1/4 w 5%	SM/1206	ANY	CRCW1206221	
36	2	R67,R75	RESISTOR	430 OHMS	1/2W 5%	SM/1210	ANY	CRCW1210431	
37	4	R7,R16,R17,R22	RESISTOR	910 OHMS	1W 5%	SM2512	Panasonic	ERJ-1TYJ911U	
38	8	R4,R9,R13,R18,R19,R24,R77,R81	RESISTOR	649 OHMS	1/8 W 5%	SM/0805	ANY	CRCW0805649RFKEA	
39	4	R58,R59,R60,R61	RESISTOR	1K	1/8 W 5%	SM/0805	ANY	CRCW0805102	
40	2	R25,R26	RESISTOR	2.7K	1/8 W 5%	SM/0805	ANY	CRCW0805272	
41	8	R5,R14,R20,R47,R48,R49,R78,R79	RESISTOR	5.1K	1/8 W 5%	SM/0805	ANY	CRCW0805512	
42	5	R8,R15,R21,R45,R76	RESISTOR	5.1K	1/4 w 5%	SM/1206	ANY	CRCW1206512	
43	8	R63,R64,R65,R66,R71,R72,R73, R74	RESISTOR	5.6K	1/2W 1%	SM/1210	ANY	CRCW12105K62FKEA	
44	4	R10,R11,R12,R43	RESISTOR	10K	1/8 W 5%	SM/0805	ANY	CRCW0805103	
45	1	R44	RESISTOR	22K	1/4 W 5%	SM1206	ANY	CRCW1206223	

series800 RF Module Carrier Board - PARTS LIST No: 062908-1 **REV:** AC									
Item	**Qty**	**Reference**	**Part**	**Value**	**Parameters**	**Package**	**Manu**	**TiL Number**	**Lot #**
46	8	R50,R51,R52,R53,R54,R55,R80, R82	RESISTOR	300K	1/8 W 5%	SM/0805	ANY	CRCW0805304	
47		R23,R34	RESISTOR	DNF	DO NOT FIT - 1/8 W 5%	SM/0805	ANY		
48	1	U1	I C		I/O Expander,8-Bit,I2C,	TSSOP	PHILIPS	PCA9557D	
49		U2	DNF		REGULATOR	SM/SOT23	ANY		
50	1	U3	RF AMP	LEE-49	DC to 8 GHz, useable to 10 GHz	SM	MINI CIRCUITS	LEE-49	
51	2	U4,U5	LOGIC	NL27WZ04D	DUAL INVERTER	SOT 363	ON Semi	NL27WZ04DFT2G	

5.14 HEATSINK ASSEMBLY: 082021-1

Used On: series800 Heatsink Assembly		**Assembly No:** 083734-1	**Rev**
Date: 02 SEP 2008	**Originator:** Jon Rorke	**Parts List No:** 082021-1	D

Item	Qty	Reference	Part	Value	Parameters	Package	Manu	Til Number	Lot #
1	1		HEATSINK		MACHINED		INTEGRAL	058699	
2	1		CONNECTOR		BNC, Panel Mount		TIL	927019	
3	1		ASSEMBLY		Antenna connector board B1		TIL	013525-2	
4	1		HOLE COVER		3/4 X 3/4 " , BLACK		TIL	999019	
5	1		FAN		12VDC, 30mm Sq x 10mm H		SUNON	GM1203PFV2-8.GN	
6	2	FOR FAN	PIN		CRIMP		BERG	48254-000	
7	1	FOR FAN	HOUSING		2 PIN		BERG	65039-035	
8	3		STANDOFF		M-F 3/16", HEX x 7/16"L		AMATON	9727-SS-0440	
9	3		SCREW		4-40 x 9/16", Pan Phil, Black Oxide		ANY	4-40 x 9/16" PP BO	
10	2		SCREW		4-40 x 1/4", Pan Phil, S/S		ANY	4-40 x 1/4" PP S/S	
11	2		SCREW		4-40 x 9/16", Pan Phil, S/S		ANY	4-40 x 9/16" PP S/S	
12	4		NUT		4-40, #2 Blank, S/S		ANY	4-40 Nut #2 Blank S/S	
13	6		WASHER		4, SPLIT, S/S		ANY	4-40 split washer S/S	

5.15 ANTENNA CONNECTOR: 012699-2

Used On: Antenna Connector		**Assembly No:** 013525-2	**Rev**
Date: 11 Dec 2001	**Originator:** Jon Rorke	**Parts List No:** 012699-2	C

Item	Qty	Reference	Part	Value	Parameters	Package	Manu	Til Number	Lot #
1	1	Pcb	Pcb	019238			Candor	019238	
2	1	J1	Cable Assy.	017319	Miniature Coax W/ Osmt Connector		Til	017319-4	
3	A/R		Lacing Cord				Any	Lacing Cord	

Technisonic Industries Limited
240 Traders Blvd., Mississauga, ON. Canada L4Z 1W7
Tel: (905) 890-2113 Fax: (905) 890-5338

IMPORTANT
WARRANTY

All communication equipment manufactured by Technisonic Industries Limited is warranted to be free of defects in Material or Workmanship under normal use for a period of one year from Date of Purchase by the end user.

Warranty will only apply to equipment installed by a factory approved and/or authorized facility in accordance with Technisonic published installation instructions. Equipment falling under the following is not covered by warranty:

- Equipment that has been repaired or altered in any way as to affect performance
- Equipment that has been subject to improper installation
- Equipment that has been used for purposes other than intended
- Equipment that has been involved in any accident, fire, flood, immersion, or subject to any other abuse.

Expressly excluded from this warranty are changes or charges relating to the removal and re-installation of equipment from the aircraft. Technisonic will repair or replace (at Technisonic's discretion) any defective transceiver (or part thereof) found to be faulty during the Warranty Period.

Faulty equipment must be returned to Technisonic (or its authorized Warranty Depot) with transportation charges prepaid. Repaired (or replacement) equipment will be returned to the customer with collect freight charges. If the failure of a transceiver occurs within the first 30 days of service, Technisonic will return the repaired or replacement equipment prepaid.

Technisonic reserves the right to make changes in design, or additions to, or improvements in its products without obligation to install such additions and improvements in equipment previously manufactured. This Warranty is in lieu of any and all other warranties express or implied, including any warranty of merchantability or fitness, and of all other obligations or liabilities on the part of Technisonic.

This Warranty shall not be transferable or assignable to any other persons, firms, or corporations.

For warranty registration, please complete the online Warranty Registration Form found at www.til.ca.