VHF/FM AIRBORNE TRANSCEIVER MODEL TFM-138D

(Includes DF signal output)

Service Manual - Addendum

Theory of Operation, Schematics, Parts List, Test and Alignment Documentation

Til Document No.
97RE227
Rev. N/C
Issue 1

MARCH 1999

Technisonic Industries Limited

250 Watline Avenue, Mississauga, Ontario L4Z 1P4 Tel:(905)890-2113 Fax:(905)890-5338
3840 East Robinson Road, Suite 214, Amherst, New York 14228 Tel:(716)691-0669

SERVICE MANUAL - ADDENDUM
For Model TFM-138D (DF output)
THEORY OF OPERATION, SCHEMATICS and PART LISTS

A.1 INTRODUCTION

This section provides the theory of operation for Transceiver Model TFM-138D. TFM-138D transceivers have Part Numbers 981086-1 and 981086-2. The "-1" configuration denotes a green LED matrix display, while the "-2" configuration denotes a red LED matrix display. The schematics, component layouts and part lists provided in this addendum refer only to the modules that differ from the standard TFM-138 series units. The Service manual for the standard TFM-138 series units should be referred to for all other information.

A.2 TRANSCEIVER MODEL TFM-138D

Transceiver Model TFM-138D is a low power VHF/FM fully synthesized transceiver which operates in simplex or semi-duplex mode on up to 120 preprogrammed frequencies and 2 guard frequencies with CTCSS tone and DPL/DCS code capability. The unit covers from 138.000 MHz to 174.000 MHz in 2.5 kHz steps, allowing for 25 KHz channel spacing. The TFM-138D will also support 12.5 KHz (narrowband FM) channel spacing or 25 kHz channel spacing which can be programmed from the front panel for each memory position. The unit offers 1 Watt or 10 Watts (front panel selectable) of transmit power. The TFM-138D also provides a DF output with a phase shift of 180° ± 10° at 5.68kHz. These units are designed for airborne applications and are ideally suited to helicopter installation.

A.2.1 TRANSCEIVER MODULES

The Model TFM-138 Series Transceivers contain five modules which are housed in a single chassis (see Drawing 982495). These modules and their sub-modules are described in the following paragraphs (Schematics and Layouts are also referenced):

(1) Microcontroller Board, Module A1, Part Number 983354-1, is described in paragraph A.3. Part Number 983354-1 is used in the TFM-138D and supports a DCS/DPL code sub-module and an additional outboard serial EPROM to the microprocessor (Memory Expansion Module, P/N 943171-1) which provides the increased memory positions. The current software version is F14A for the TFM-138D.

(2) Guard Receiver/Transmitter module A2, Part Number 923034-4 is utilized in the TFM-138D and supports 12.5KHz channel spacing. In all other TFM-138 series transceivers this board supports the Main Rx/Tx function. Please note that the schemtic (955178) refers to Main Rx/TX however the "-4" version of this P/N will support the Guard Rx/Tx function in the TFM-138D.

Module A2 is described in paragraph A.4 and includes the following sub-modules:

(a) Receiver VCO - Local Oscillator sub-module A2A1, Part Number 923037-1, is described in paragraph A.4.1.

(b) Transmitter VCO sub-module A2A2, Part Number 923099-2, is described in paragraph A.4.2.

A.2.1 TRANSCEIVER MODULES (continued)

A.2.1 **TRANSCEIVER MODULES (continued)**

(3) Main Receiver/DF Module A3, Part Number 983355-1 is used in the TFM-138D. This module supports 12.5KHz spacing for the main receiver and the direction finding (DF) function.

This module (A3) is described in paragraph A.5 and includes a Receiver VCO - Local Oscillator sub-module A3A1, Part Number 923037-1 which is identical to that described in 2 (a) above.

(4) Front Panel Module A4, Part Number 983377-7 (green display) or 983377-8 (red display), is described in paragraph A.6. This module (A4) includes the front panel sub-assembly Part number 983378-7 (green) or -8 (red) plus Backlight board, Part Number 943163-1. Module A4 is also comprised of the following sub-modules:

(a) Airborne Keypad board sub-module A4A1, Part Number 973349-1.
(b) Display Board, sub-module A4A2, Part Number 983372-1 (green) or 983372-2 (red).
(c) Interface Board, sub-module A4A3, Part Number 983373-1.
(d) Switch (FM keypad board) sub-assembly, module A4A4, Part Number 983374-1.

(5) Chassis, Part Number 928114, Bottom Cover Part Number 938177, Top Cover Part Number 938182 and Tray Part Number 938183.

(6) Heatsink assembly Part Number 983361-1 which includes provisions for the extra 9-pin connector used to support the DF output information.

A.3 **MICROCONTROLLER (MCU) BOARD MODULE A1, P/N 983354-1**

Refer to: Micro controller board module, Schematic Diagram, Drawing 985335
Micro controller board module, Component Layout, Drawing 989930
Memory Expansion Module, Schematic Diagram, Figure 5-28
Memory Expansion Module, Component Layout, Figure 5-29
Noise Squelch Board - Schematic Diagram, Figure 5-6
Noise Squelch Board - Component Layout, Figure 5-7

Note: When Drawing numbers are referred to they are contained in this addendum. Figure numbers are found in Section 5 of the main manual.

The current software version is F14A for the TFM-138D.The Motorola 52-pin micro-processor (p/n MC68HC711E20CFN3) is labelled with the software version to which it has been programmed. If a radio is to be upgraded to a different future software revision, this microprocessor will have to be changed.

Microphone audio, which is input to the radio at pin 6 of J1 (the 15 pin D-subminiature connector located on the rear panel), is routed to mic gain control R8 (which can be accessed through the right side of the transceiver chassis), and then input to microphone amplifier (U5). The audio output from U5 is then applied to an active filter (U6) which provides modulation limiting, and shapes the frequency response of the signal to ensure that correctly pre-emphasized audio is provided to the transmitter. This audio signal, along with CTCSS ,DPL codes and DTMF tones are summed before being routed to the Tx/Rx board, where the deviation adjust pot (R30) controls the FM modulation level of the transmitter. In the TFM-138D, deviation adjust pot R76 controls

narrowband deviation. Mic audio is also routed to the audio output amplifier (U7) to provide transmitter sidetone. Sidetone level, which is controlled by potentiometer R37, can be accessed through the left side of the transceiver chassis.

Receive audio from the guard receiver is de-emphasized by operational amplifier U2B, and is then fed through analog switch U3 to the guard volume control (R2 on Interface Board). In the MCU board, amplifier U2B also employs an active filter to eliminate frequencies below 300Hz. The return audio (from R2) is then summed with main audio at the junction of R40 and R41, and is then routed back through analog switch U3 to the audio output amplifier U7. Analog switch U3 is gated by the squelch control signal from guard receiver U1 on the Guard Receiver Board, through transistor Q6, which also controls the guard squelch light on the front panel display. The analog switch enables audio when the base of Q6 goes low, indicating the presence of a squelch signal.

Receive audio from the main receiver is de-emphasized by operational amplifier U2A, and is then fed through a TS-64 CTCSS encoder/decoder module and a DCS-23 DPL/DCS encoder/decoder module. The TS-64 or DCS-23 decodes any tones (or digital codes) which may be present and provides an enable output to analog switch U4, if the tone to which the decoder is programmed is received. It also rejects any audio frequency below 300 Hz, preventing CTCSS tones/DPL codes from being present in receive audio. From Analog switch U4, the main audio is routed to the main volume control R1 on the Interface Board, and then back through analog switch U3. The switched output of U3 in turn drives U7 which is the final audio output amplifier. The Squelch input signal (from pin 11 of U1 on the guard Rx/Tx Board) is applied to the base of Q1 which drives an enable input to the TS-64, which in turn (depending on valid or no CTCSS tone input to the TS-64) provides an enable output to analog switch U4, allowing main audio be output to the final audio output amplifier U7. The audio output level from transformer T1 is 500 mW into 600 ohms, providing ample signal to adequately drive any audio controller. Control data (tone encode/decode programming information) is converted to parallel data and delivered to the TS-64 tone encoder/decoder module by shift register U8. Serial input to U8 is from the Programmable Microcontroller U1. Components U10 and U11 supply data to the DCS-23 (DPL/DCS board) in the TFM-138D. The microcontroller accepts input instructions from the keyboard, provides for storage of operating frequencies, CTCSS tones and alpha numeric labels, and provides data output to the display, the transmitter synthesizer, the guard synthesizer and the main receiver synthesizer. DTMF encoder U10 generates standard DTMF telephone signaling frequency pairs. The keypad at the front panel of the transceiver is numbered and lettered to correlate with a conventional telephone keyset.

In the transmit mode when any key is depressed, Microcontroller U1 sends a serial data signal identifying the DTMF frequency pair. Microphone audio, CTCSS tones, DPL codes and DTMF frequency pairs are summed at the junction of resistors R44, R45 and R46, then output to the Guard Rx/Tx Board where the composite audio is applied to modulation level control R30 or R76 for the TFM-138D operating in the narrowband mode. This signal is then output to the Transmitter VCO Board where it is used to modulate the VCO. Sidetone is derived from output of mic audio amplifier U6 and is routed through sidetone level control R37, and then to analog switch U3. Sidetone is enabled by U3 and applied to output amplifier U7 when the transceiver goes into the transmit mode.

Transmitter output power is controlled by activating the Hi /Lo power switch on the front panel, (SW14 on the Keypad Board). When the switch is open, transmitter output is in the high power mode. When the switch is closed a ground is provided back through pin 11 of J6 on the MCU Board, and to Microcontroller U1. The command to

A.3 MICROCONTROLLER BOARD MODULE A1, P/N 983354-1, (continued)

"go low" is output from U1 with other serial data to shift register U8, where it is output on pin 4 and routed to the base of transistor Q2. Q2 converts the output of U8 to the level necessary to be input to the analog switch, and is input to U4 at pin 10. The low power command is then output from pin 15 of analog switch U4 and routed through pin 2 of J13 on the MCU Board to pin 3 of P13 on the guard Rx/Tx Board,where it is applied to comparator U3A. U3 outputs to transistor Q1 which acts as a variable resistor in series with the DC supply to second stage RF transistor Q3, thus controlling the gain of this stage. Power output is detected by diode D2, and filtered by C45 and R29. The resultant DC voltage is fed back to U3A to provide a leveling of output power. High power RF out adjustment is provided by R23, while low power (1 Watt) adjustment is provided by R24.

A.3.1 NOISE SQUELCH submodule, P/N 963263-1

The noise squelch submodule is a small board which plugs into J5 of the MCU module board. This submodule was incorporated in TFM-138 series radios from s/n F0874 onwards. There are two active, high pass filters and detectors which pass only the noise that is present above approximately 5 kHz and converts it to a voltage level.

Audio from the main receiver is fed into pin1 P5 and filtered by the active filter U1A. The output is converted to a voltage level by D1A&B and C4. This voltage level is compared with a voltage determined by R11, R12 and R13 by U1B. The resultant signal is fed to pin4 P5 as main squelch inhibit. The circuit for the guard noise squelch is identical but the audio comes in pin2 P5 and the guard squelch inhibit signal goes out pin6 P5. The action of both ciruits can be disabled by the squelch defeat line coming in on pin5 P5. This is achieved by shorting the noise squelch voltage levels to 0.6 volts so that the comparators can not trigger.

A.4 GUARD RECEIVER/TRANSMITTER MODULE A2, P/N 923034-4

The Guard Receiver/Transmitter Module, P/N 923034-4 consists of the guard receiver section, which includes the Receiver VCO - Local Oscillator Sub-Module A2A1, and the transmitter section which includes Transmitter VCO Sub Module A2A2.

Refer to:

Guard Receiver/Transmitter Module, Schematic Diagram, Drawing 955178
Guard Receiver/Transmitter Module Component Layout Diagram, Drawing 92909
Crystal Heater, Scematic Diagram, Figure 5-11
Crystal Heater, Component Layout, Figure 5-12
Receiver VCO Sub Module, Schematic Diagram, Figure 5-13
Receiver VCO Sub Module, Component Layout Diagram, Figure 5-14
Transmitter VCO Sub Module, Schematic Diagram, Figure 5-15
Transmitter VCO Sub Module, Component Layout Diagram, Figure 5-16

A.4.1 Receiver Section

The guard receiver is identical to the main receiver described in Paragraph A.5, therefore no further description will be made here. The main receiver and guard receiver are coupled to the antenna relay via RF coupler (T1, T2), and then to the antenna filter. This is a low pass Butterworth filter which is tuned to roll off just above 174 MHz. It's purpose is to attenuate harmonics generated by the transmitter in transmit mode, and reject out of band and spurious signals in the receive mode.

A.4.1.1 Receiver VCO - Local Oscillator Sub-Module, P/N 923037-1

The main and guard receiver local oscillator circuits are identical, employing a Colpitts type oscillator. Tuning for these circuits is provided by varactor D1 at the base of oscillator transistor Q1 on the Rx VCO Board. Tuning voltage, which is generated by synthesizer IC (U5) on the Guard Receiver Board or Main Rx/Tx Board, is supplied through a loop filter to the varactor diode (D1) on the Rx VCO Board. The output of oscillator transistor Q1 is fed to buffer transistor Q2, which provides from it's collector through capacitor C5, a feedback output to the receiver synthesizer IC (U5) on the Guard Receiver Board or Main Rx/Tx Board. Transistor Q3, which acts as a third buffer, amplifies the oscillator signal to a level of +10 dBm which it outputs to the receive mixer (MX1, pin 8) on the Guard Receiver Board or Main Rx/Tx Board.

A.4.2 Transmitter Section

TFM-138D transmitter operation is controlled by the microcontroller which is located on the MCU Board. When a PTT input is detected at pin 15 of microcontroller U1, it provides an output at pin 14 which drives a Darlington switch made up of transistors Q4 and Q5. When the transceiver is in the receive mode, the switch is turned off, removing the supply voltage from the first amplifier stage of the transmitter (Q2 on the guard Rx/Tx Board), comparator circuit (U3A and B, and Q1) as well as second amplifier stage Q3, and the antenna relay. When PTT is activated (goes to ground), Q2 is turned on , and +12 Volts is supplied to the transmitter, comparator and antenna relay. A lock detect circuit (U6A and U6B on the guard Rx/Tx Board) which continuously monitors the synthesizer for an "out of lock" condition, detects synthesizer "lock up" and enables the transmitter and antenna relay switch. At the same time, Tx synthesizer U4 on the guard Rx/Tx Board is enabled by microcontroller U1. If an "out of lock" condition should occur the lock detector provides an output to the Tx synthesizer and microcontroller, which disables the antenna relay and transmitter until such time as a locked condition again exists, ensuring that the transmitter cannot transmit on an unwanted frequency.

When PTT is released, the supply voltage is removed from comparator U3, transistor switch Q1 and RF transistors Q2 and Q3 on the guard Rx/Tx board, disabling the transmitter. The antenna relay is de-energized as power is removed and switches to the receive position, and the transmitter synthesizer is disabled to prevent interference with the receivers. A crystal heater is used to maintain the Tx synthesizer crystal (Y3) at an elevated temperature to ensure that ambient conditions do not affect transmitter frequency stability.

Audio to the transmitter (which includes mic audio, CTCSS Tones and DTMF tones) is fed from J9, pin 5 on the MCU board to P9, pin 5 on the guard Rx/Tx Board where it is applied to modulation level pot R30. Mic gain, CTCSS level and DTMF level are all controlled on the MCU Board. The composite audio (modulating signal) is then supplied to the transmitter VCO. In transmit mode, the modulated Tx VCO signal is amplified by a four stage amplifier, delivering a maximum of 10 Watts of RF to the antenna. The gain of the transmitter amplifier is controlled by a comparator circuit (U3) which compares the output of the transmitter (via a stripline pickup at the output of the antenna filter) to a reference voltage provided through analog switch U4, by high power set pot R23 and low power set pot R24. U4 provides switching between high and low power transmitter output.

A.4.2.1 Transmitter VCO Sub-Module, P/N 923099-1 or -2

The transmitter VCO utilizes the same oscillator, buffers and loop filter as does the receiver VCO, however the transmitter VCO employs parallel varactor diodes at the base of oscillator transistor Q1. Tuning voltage is supplied through a loop filter to dual varactor diode package D1, while modulating audio is supplied is also supplied to D1 through C-18 and R16. At the same time, modulating audio is presented to the cathode of the parallel varactor diode D2. The output of the Transmitter VCO is routed to P6, pin 2 of the guard Rx/Tx Board where it is applied to the first stage of the RF power amplifier (Q2). The P/N 923099-2 VCO Sub-Module is utilized in the Guard Rx/Tx Module P/N 923034-4.

A.5 MAIN RECEIVER/DF MODULE A4, P/N 983355-1

Refer to: Main receiver/DF module, Schematic Drawing 985336
Main receiver/DF module, Component Layout 989931

The receive signal comes in to the main receiver module via a coax cable from J4 on the Guard Rx/Tx Board. Impedance matching to the first tuned circuit is provided by L15. The receiver front end consists of MOSFET amplifier Q1, and six tuned circuits (L8, L9, L10, L12, L13 and L14), of which four are band pass, and two are band reject. Synthesizer U2 provides tuning voltage to the VCO, to the bandpass tuned circuits, and to the band reject filters. The band pass filters are tuned to pass the desired operating frequency, while the band reject filters are tuned to the mirror image frequency (desired operating frequency plus two times the local oscillator frequency). The band reject filter prevents the possibility of the receiver "hearing" an image frequency.

The output of the front end is fed to a double balanced mixer (MX1) along with the signal from the local oscillator VCO. One product of the mixing process is 10.7 MHz, which is the first IF frequency. This IF signal is amplified by MOSFET Q1, which drives a four pole, 10.7 MHz crystal filter (XF1). This crystal filter provides most of the selectivity of the first IF. The signal is then passed on to receiver U1 which provides more filtering and further amplifies the 10.7 MHz signal. The receiver mixer, which has a fixed frequency, crystal controlled local oscillator (10.245 MHz) then converts the incoming signal to a second IF frequency of 455 KHz. Second IF filtering is provided by ceramic filter CF1, which determines the final selectivity of the receiver.

Audio Demodulation is provided by a quadrature detector which is incorporated into receiver U1, and tuned by quadrature coil L1. Receiver U1 also incorporates noise squelch with a squelch indicator output, which is routed to Q6 on the MCU Board. Q6 causes analog switch U3 to enable guard audio to final audio amplifier U7 which is located on the MCU Board. Audio output from pin 13 of receiver U1 (on the Main Receiver/DF Board), is filtered by RC network R26 and C35 before being fed to J4, pin 3 of the MCU Board and to the final audio stage.

The main receiver local oscillator is comprised of main synthesizer U2 on the Main Receiver Board and the receiver VCO. The receiver VCO was described in Para 4.4.1.1. The synthesizer, which incorporates a prescaler, dividers, a crystal oscillator and phase detector/charge pump resides in a single integrated chip. The dividers are enabled via lines from the MCU (located on the MCU Board) yielding a comparison frequency of 2.5 kHz, providing for tuning increments of 2.5 KHz. The 3- state synthesizer charge pump output is followed by a low pass filter to ensure smooth DC tuning voltage to the VCO.

Tuning voltage is also supplied to the receiver front end tuning varactors, ensuring that the local oscillator is always tuned 10.7 MHz away from the receiver tuned circuits. A

crystal heater keeps the synthesizer reference oscillator (Y2) at an elevated temperature, to ensure frequency stability in varying ambient conditions.

A.6 FRONT PANEL MODULE A4, P/N 983377-1 (GREEN) for TFM-138D P/N 983377-2 (RED) for TFM-138D

Refer to:

Airborne Keypad Board Sub-Module A4A1, Schematic Diagram 975323
Airborne Keypad Board Sub-Module A4A1, Component Layout 979921
Display Board Sub Module A4A2, Schematic Diagram 985352
FM Interface Board Sub Module A4A3, Schematic Diagram 985353
FM Interface Board Sub Module A4A3, Component Layout 989997
Front Panel Backlight Board, Schematic Diagram, Figure 5-30
Front Panel Backlight Board, Component Layout, Figure 5-31

The volume controls for the main and guard receivers (R1 and R2 respectively) are independent, with the transceiver power on-off switch co-located with the main volume control (R1). Squelch level for each receiver is adjusted by a potentiometer which can be accessed through the bottom of the chassis, directly under the channel (main or guard) you wish to adjust. Squelch level is preset at the factory for 0.5 microvolts. Since some aircraft generate more electrical noise than others, it may be necessary to re-adjust the squelch levels after installation. Note that the squelch level adjustment pots are effectively removed from the circuit when the squelch test button (on the front panel) is depressed.

Each key on the Keypad Board is held at logic high until the keypad is depressed, at which time it is pulled low. The keypad interfaces with a BCD encoder (U1) on the Interface Board via P1/J1 interconnect. Binary data from the Interface Board is then output to the MCU. Back lighting for the keypad is provided by 9 LED's, while panel back lighting is provided by 15 LED's embedded into the face panel. Intensity of panel and keyboard backlighting is controlled by the aircraft dimmer bus. Models are available for both 28 volt DC and 5 volt AC back lit aircraft systems. Display intensity is controlled by the "up" and "down" buttons on the keypad. Switches SW14, SW15 and SW16 which control high/low transmitter power setting, main or guard transmitter selection and guard 1 or guard 2 receiver/transmitter selection, are connected to the Interface Board through J2/P2, pins 5, 6 and 7 respectively. These switch lines are held high by 100 K ohm pull-up resistors incorporated into resistor network Z1, and go low when the switches are activated. These high and/or low signals are then output to the MCU Board via P6/J6 pins 1, 3 and 11, and are input to the microcontroller at pins 20, 21 and 22.

The alpha numeric display consists of a 3 section, two line, Light Emitting Diode (LED) matrix which can display 48 red or green characters, depending the part number of the display.

A.6 FRONT PANEL MODULE A4 (continued)

The 3 display matrix modules, along with light emitting diodes D1 and D2, are mounted on the Display Board, which in turn plugs in to the front of the Interface Board. Five display column drivers (Q1 through Q5), voltage regulator VR1 and switching regulator/power supply U2 reside on the Interface Board and are interfaced with the Display Board at P5/J5.

The column drivers, which are connected to the MCU Board through P6/J6, are driven by the microcontroller. LED open squelch indicators (D1 and D2) which are located on the Display Board, are driven by transistors Q6 and Q7, which reside on the Interface Board, and are connected to the Display Board via P7/J7. The display circuit ground is isolated from chassis ground to prevent the possibility of ground loop currents causing interference which may affect sensitive audio and RF circuits within the transceiver, and is grounded only at pins 15 and 8 of main connector J1. To further increase attenuation of noise generated by the display board, Pi LC output filtering is used at the output of switching regulator U2, as well as DC regulator VR1.

The Front Panel Sub-assembly, P/N 983378-7 or (-8) consists of the plastic face panel appropriately labelled TFM-138D and the appropriate Green or Red display lens (filter) and the Backlight Board P/N 943163-1 which is a small PCB with 15 surface mount LED's utilized to backlight the front panel.

DOCUMENTS ENCLOSED IN THIS SECTION

Module: ***N/A - FINAL ASSEMBLY***

Module No.	*Document Description*	*Document No.*	*No. Pages*
N/A	Final Assembly Parts List	982485	2
N/A	TFM-138D Functional Block Diagram	984066	1
N/A	TFM-138D Outline Drawing	981086	1
N/A	TFM-138D exploded view/final assembly drawing	982495	1

LEGEND: ★ For Optional Front Panel Assemblies see E.R. 981086

BATCH No.:

	No.	QTY	COMPONENT DESIGNATION	DESCRIPTION	PARAMETERS	MANUFACTURER P/N	TiL P/N	MANUFACTURER	SUPPLIER	LOT No.
	1	1		Chassis		928114	928114	CNC Metal	114	
	2	1		Tray		938183	938183	CNC Metal	114	
	3	1		Top Cover		938182	938182	CNC Metal	114	
	4	1		Bottom Cover		938177	938177	CNC Metal	114	
	5	1		Microphone adjust Silkscreen		959634	959634	CNC Metal	114	
	6	1		Side Tone adjust Silkscreen		959635	959635	CNC Metal	114	
	7									
	8	1		MCU Assembly		983354-1	983354-1	TiL	377	
	9	1		Guard TX/RX Assembly		923034-4	923034-4	TiL	377	
	10	1		Main RX Assembly		983355-1	983355-1	TiL	377	
	11									
★	12	1	TFM 138D Green	Front Panel Assembly		933151-7	933151-7	TiL	377	
★	13	or	TFM 138D Red	Front Panel Assembly		933151-8	933151-8	TiL	377	
	14									
	15	1		Heatsink Assembly		983361-1	983361-1	TiL	377	

REVISIONS		
LTR	DATE	APP'D.
N/C	May 31/98	
A	July 10/98	

USED ON: TFM 138D FINAL ASSEMBLY

ASSY.No.: 981086-1,-2

DATE: May 31/98

SHEET 1 **OF** 2

TiL technisonic industries ltd

PARTS LIST

NO. **PL-** 982485

	No.	QTY	COMPONENT DESIGNATION	DESCRIPTION	PARAMETERS	MANUFACTURER P/N	TiL P/N	MANUFACTURER	SUPPLIER	LOT No.
	16	1		Heatsink Bracket		938184	938184	Integral	202	
	17	4		Fastener		PFSC35-38ARB		Dzus	193	
	18									
	19	4		Screw, Flat Phil	100° S/S	4-40x5/16"		Any	145, 5	
	20	27		Screw, Flat Phil	100° S/S	4-40x3/16"		Any	145, 5	
	21	6		Screw, Pan Phil	S/S	4-40x3/8"		Any	145, 5	
	22	16		Screw, Pan Phil	S/S	4-40x1/4"		Any	145, 5	
	23	1		Bracket		948199	948199	CNC Metal	114	
	24	21		Lockwasher	S/S	#4		Any	145, 5	
	25	1		Nut		4-40		Any	145, 5	
	26	1		Bushing		B51547F019		Motorola	155	
	27	1		Silpad - (Reference only kitted with MCU).						
	28	1	TFM 138D	Label, Serial No.	981086-1	989955	989955	Hrab	196	
	29	1	TFM 138D	Label, Serial No.	981086-2	989956	989956	Hrab	196	
	30	1	TFM-138	FCC Label	IMA TFM-138	939450	939450	Hrab	196	
	31	1		Label	28V	939452	939452	Hrab	196	
	32		Alternate - OPT1	Label	5V	949454	949454	Hrab	196	
	33	1		Label	Software version	989942	989942	Hrab	196	
	34	1		Label	Modification	989941	989941	Hrab	196	
	35	1		Label	Phase Delay	969685	969685	Hrab	196	
	36	4		Jack Screw		7228		Keystone	160	

THIS DRAWING CONTAINS GENERAL AND OTHER INFORMATION WHICH ARE THE PROPERTY OF TECHNISONIC INDUSTRIES LIMITED. EXCEPT FOR RIGHTS EXPRESSLY GRANTED BY CONTRACT TO THE CANADIAN OR UNITED STATES GOVERNMENT MAY NOT, IN WHOLE OR IN PART, BE DUPLICATED OR DISCLOSED OR USED FOR MANUFACTURE OF PART DISCLOSED HEREIN, WITHOUT THE PRIOR WRITTEN PERMISSION OF TECHNISONIC INDUSTRIES LIMITED.

REVISIONS

LTR	DESCRIPTION	DATE	APPR

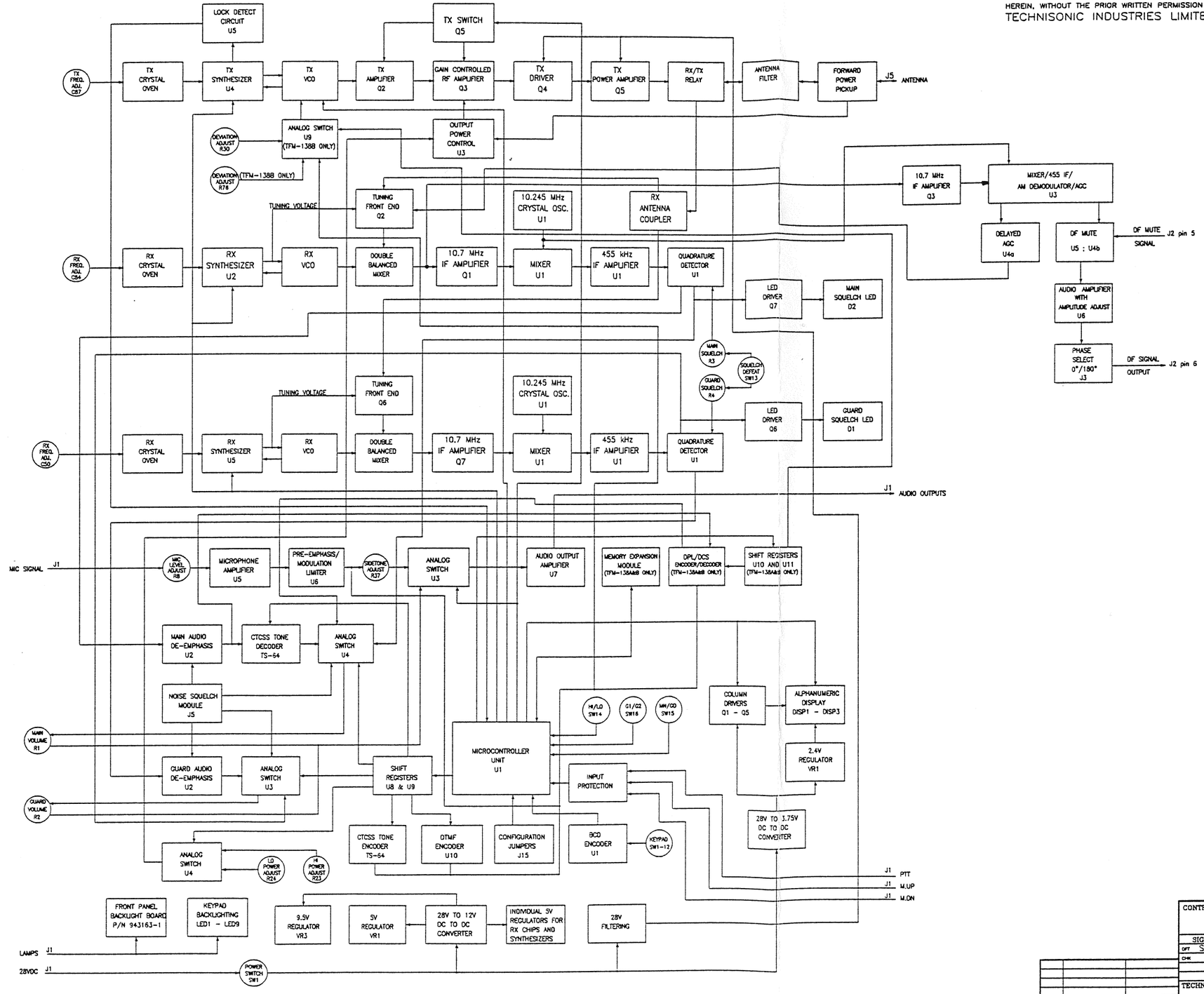

LTR

			981086-1
REQ'D	NEXT ASSY	USED ON	
APPLICATION			

CONTRACT NO.		Technisonic Industries	
SIGNATURES	DATES	VHF/FM TRANSCEIVER W. DF OUTPUT FUNCTIONAL BLOCK DIAGRAM	
DFT S.M./J.R.	JULY 14/98		
CHK			
TECHNISONIC APP'D		SIZE:	CODE ID. NO.: 38546 / DWG. NO.: 984066
		SCALE	SHEET OF

THIS DRAWING CONTAINS DESIGN AND OTHER INFORMATION WHICH ARE THE PROPERTY OF TECHNISONIC INDUSTRIES LIMITED. EXCEPT FOR RIGHTS EXPRESSLY GRANTED BY CONTRACT TO THE CANADIAN OR UNITED STATES GOVERNMENT MAY NOT, IN WHOLE OR IN PART, BE DUPLICATED OR DISCLOSED OR USED FOR MANUFACTURE OF PART DISCLOSED HEREIN, WITHOUT THE PRIOR WRITTEN PERMISSION OF TECHNISONIC INDUSTRIES LIMITED.

REVISIONS

LTR	DESCRIPTION	DATE	APPR

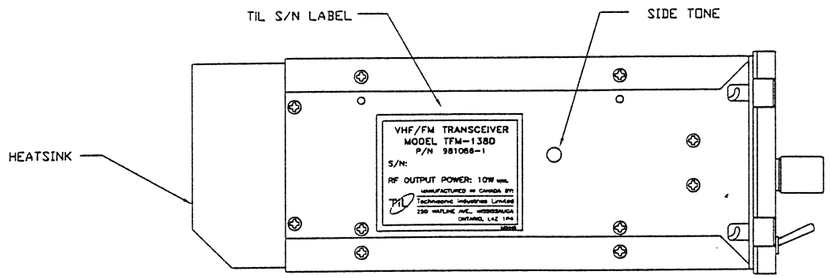

LEFT SIDE

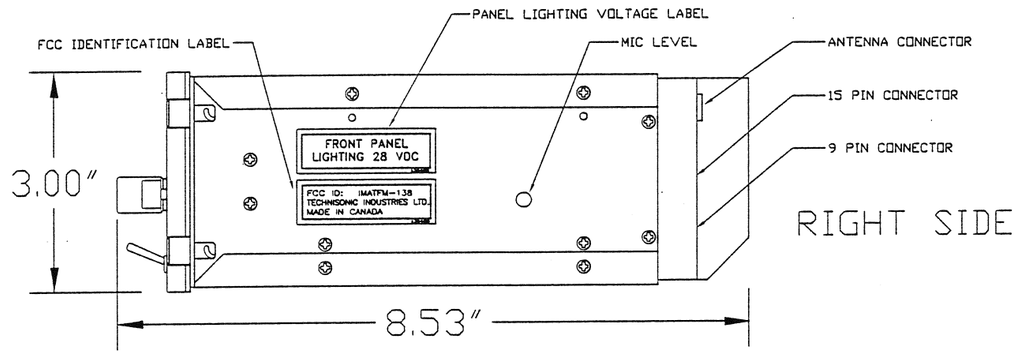

RIGHT SIDE

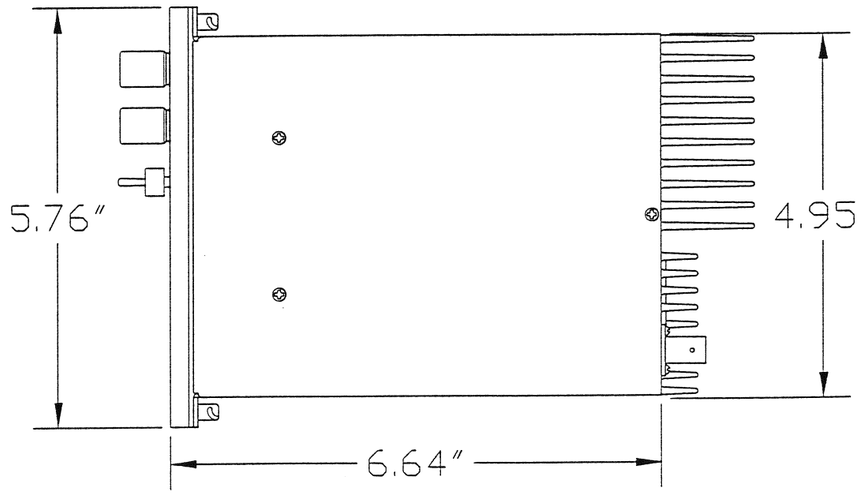

TOP

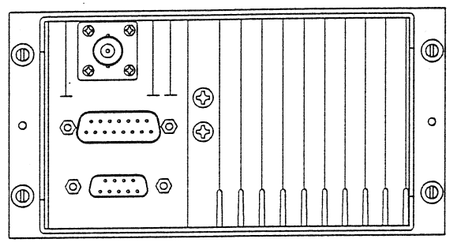

BACK

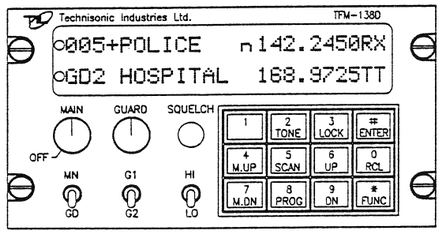

FRONT

LTR

1. USE APPROPRIATE LABELS FOR EACH MODEL
   – SEE P/L No.: 982485

NOTES: UNLESS OTHERWISE STATED.

REQ'D	NEXT ASSY	USED ON
APPLICATION		

CONTRACT NO.

SIGNATURES	DATES
DFT J. ROUDNY	JULY 14/98
CHK	
APP'D	
APP'D	
TECHNISONIC APP'D	

Technisonic Industries

VHF/FM TRANSCEIVER W. DF OUTPUT
OUTLINE DWG

SIZE	CODE ID. NO.	DWG. NO.
B	38546	981086
SCALE NONE		SHEET 1 OF 1

WHICH ARE THE PROPERTY OF TECHNISONIC INDUSTRIES LIMITED. EXCEPT FOR RIGHTS EXPRESSLY GRANTED BY CONTRACT TO THE CANADIAN OR UNITED STATES GOVERNMENT MAY NOT, IN WHOLE OR IN PART, BE DUPLICATED OR DISCLOSED OR USED FOR MANUFACTURE OF PART DISCLOSED HEREIN, WITHOUT THE PRIOR WRITTEN PERMISSION OF TECHNISONIC INDUSTRIES LIMITED.

REVISIONS

LTR	DESCRIPTION	DATE	APPR

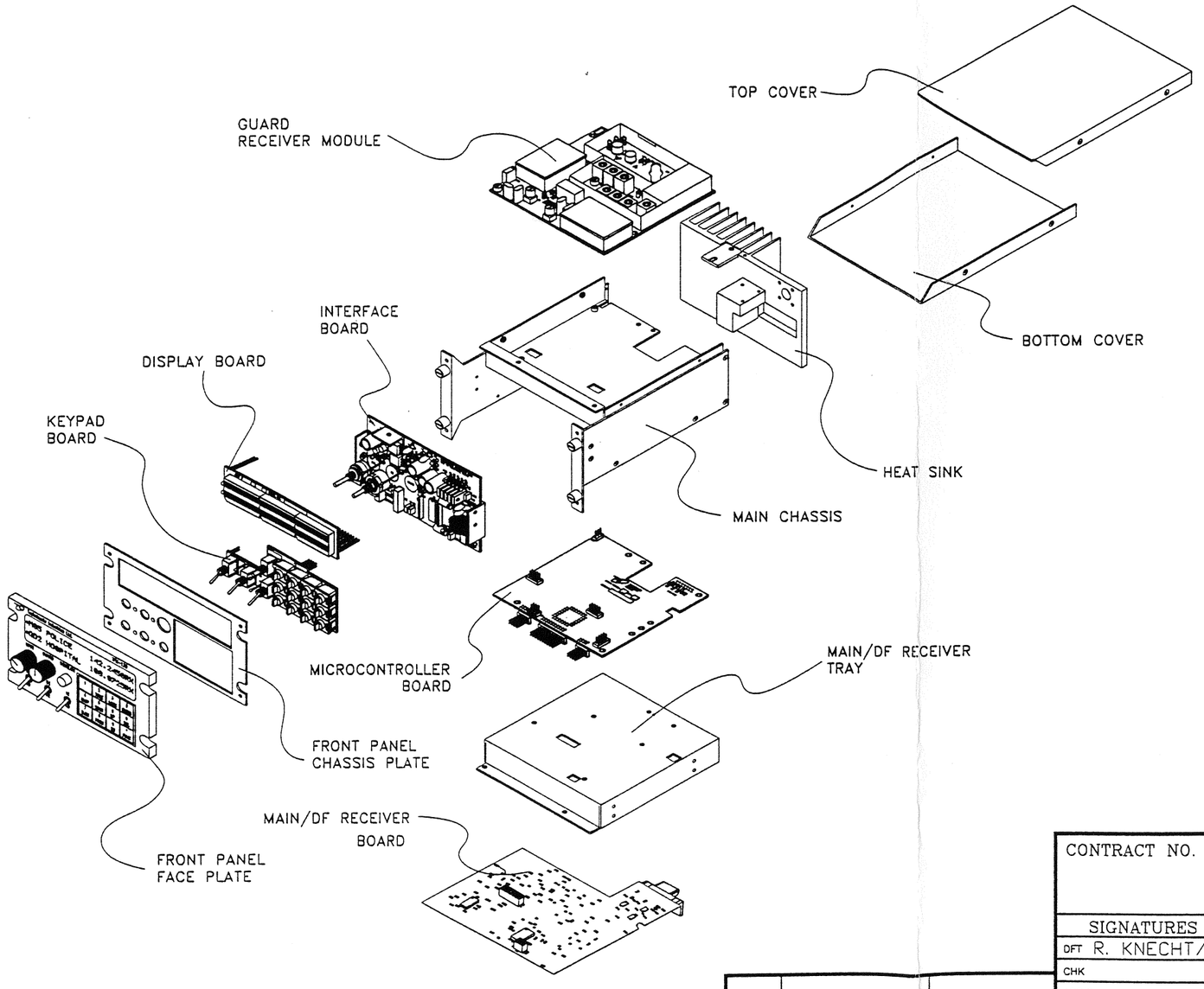

1. FOR HARDWARE SEE PARTS LIST No. 982485

NOTES: UNLESS OTHERWISE STATED.

		981086-1
REQ'D	NEXT ASSY	USED ON
APPLICATION		

CONTRACT NO.

SIGNATURES	DATES
DFT R. KNECHT/J.R.	JULY 14/98
CHK	
APP'D	
APP'D	
TECHNISONIC APP'D	

Technisonic Industries

TFM TRANSCEIVER W. DF OUTPUT

EXPLODED VIEW/FINAL ASSEMBLY

SIZE	CODE ID. NO.	DWG. NO.
B	38546	982495

SCALE NONE

SHEET 1 OF 1

DOCUMENTS ENCLOSED IN THIS SECTION

Module:	*Microcontroller (MCU) Board for DF unit*		
Module No.	***Document Description***	***Document No.***	***No. Pages***
A1	MCU (DF) Schematic Diagram	985335	1
A1	Component Layout	989930	1
A1	Parts List	9824978	10

THIS DRAWING CONTAINS DESIGN AND OTHER INFORMATION WHICH ARE THE PROPERTY OF TECHNISONIC INDUSTRIES LIMITED. EXCEPT FOR RIGHTS EXPRESSLY GRANTED BY CONTRACT TO THE CANADIAN OR UNITED STATES GOVERNMENT MAY NOT, IN WHOLE OR IN PART, BE DUPLICATED OR DISCLOSED OR USED FOR MANUFACTURE OF PART DISCLOSED HEREIN, WITHOUT THE PRIOR WRITTEN PERMISSION OF TECHNISONIC INDUSTRIES LIMITED.

REVISIONS

LTR	DESCRIPTION	DATE	APPR
A	FOR CHANGES SEE C.R.98374	4/6/98	PR

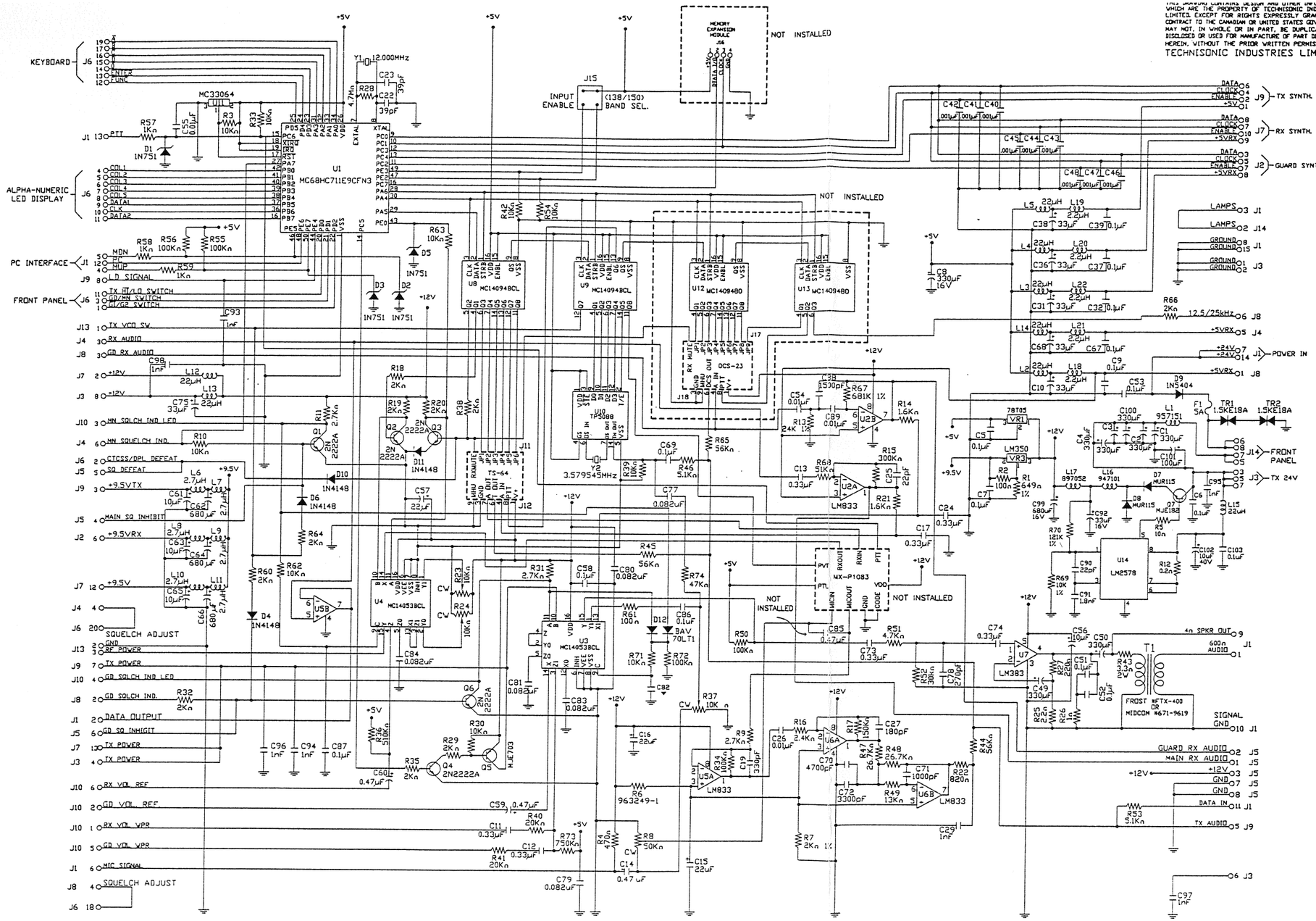

HIGHEST DESIGNATION NUMBERS USED							
C103	D12	J18	L22	Q7	R74	T1	U14
VR8	Y2	TR2	F1				

DESIGNATIONS NOT USED							
C18	C20	C21	C28	C30	C33	C34	C35
C76	VR2	VR4	VR5	VR6	VR7	VR8	

		983354-1
REQ'D	NEXT ASSY	USED ON
APPLICATION		

CONTRACT NO.

SIGNATURES	DATES
DFT	94/03/31
TECHNISONIC APP'D	

Technisonic Industries

FM MCU BOARD (FOR DF RX)
SCHEMATIC DIAGRAM

SIZE	CODE ID. NO.	DWG. NO.
	38546	985335
SCALE NONE		SHEET 1 OF 1

REV
A

DWG# 989930

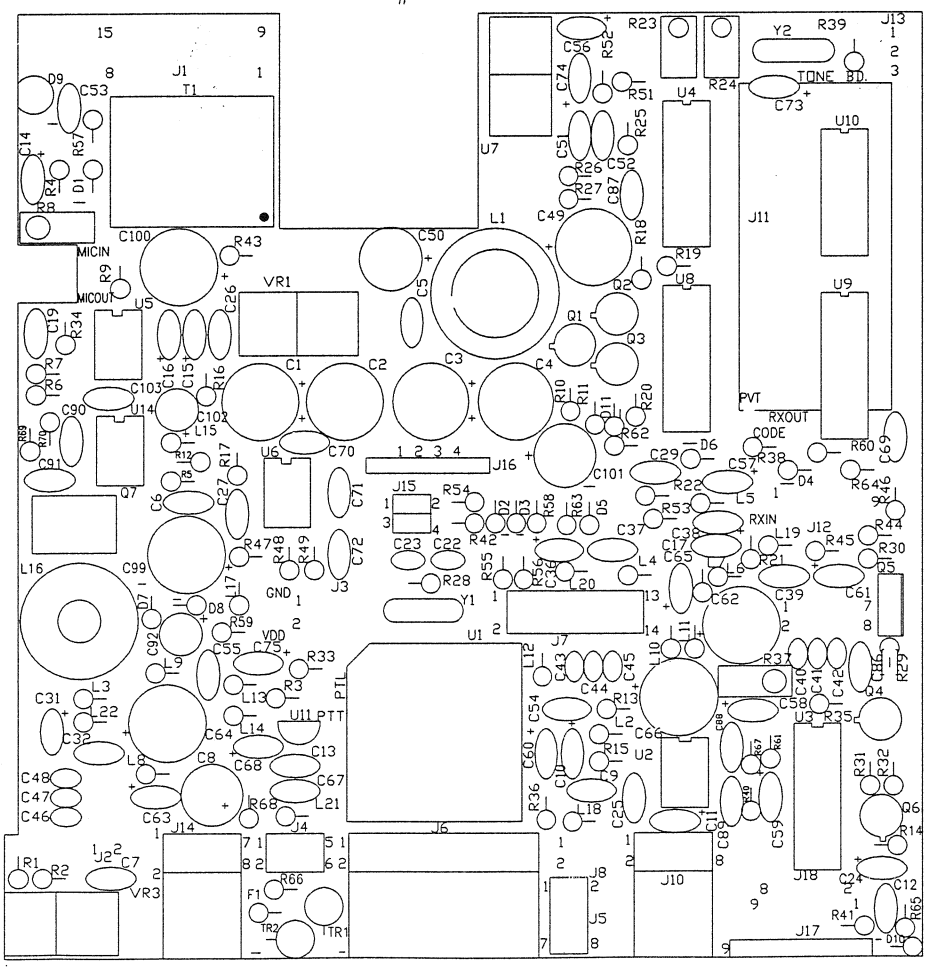

COMPONENT SIDE SILK SCREEN

LEGEND:	BATCH No.:

	No.	QTY	COMPONENT DESIGNATION	DESCRIPTION	PARAMETERS	MANUFACTURER P/N	TiL P/N	MANUFACTURER	SUPPLIER	LOT No.
	1	1		P.C.B.		989930	989930	Crimp Circuits	125	
	2									
	3	2	U12,13	Shift Store Latch	Surface Mount	MC14094BD		Motorola	155	
	4									
	5	1		DCS Encoder/Decoder		DCS-23		Communication Specialists	118	
	6	1	J18	Reference only supplied above						
	7	1	J17	Wire set (9 pieces) made from wires cut from J18						
	8	1		Double sided sticker supplied with encoder/decoder				Communication Specialists	118	
	9									
	10	1	J16	Memory Expansion Module		943171-1	943171-1	TiL	377	
	12	1	C85 (Mic. In/out)	Capacitor, Tantalum .1SP	.47µF/35	TAP .47M35SP		ITT	180	
	13									
	14									
	15									

REVISIONS		
	DATE	APP'D.
N/C	May 31/98	

USED ON: **VHF/FM MCU BOARD (FOR DF)**

ASSY.No.: 983354-1

DATE: May 31/98

SHEET 1 **OF** 10

TiL technisonic industries ltd.

PARTS LIST

NO. **PL-** 982478

Board Assembly

	No.	QTY	COMPONENT DESIGNATION	DESCRIPTION	PARAMETERS	MANUFACTURER P/N	TiL P/N	MANUFACTURER	SUPPLIER	LOT No.
	16	1	U1	Microprocessor	52 pin	MC68HC711E20CFN3		Motorola	155	
				TiL program		97S029 (F14)		TiL	377	
	17	1	for U1	Socket	52 pin	PCS-052A-1		Augat	155	
	18									
	19									
	20	1	U14	Chopper, Power Supply	8 pin	LM2578AN		National	155	
	21	A/R	For U14	Epoxy	Blue	155		Delta Bond	155	
	22	A/R	For U14	Heatsink		947111	947111	TiL	377	
	23									
	24	3	U2,5,6	Dual Low Noise Aud	8 pin	LM833N		National	155	
	25	2	U3,4	Tri 2 Chan Multi	16 pin	MC14053BCL		Motorola	155	
	26	1	U7	Audio Power Amp	7 Amp	LM383		National	155	
	27	1	for U7	Silpad		K4-54		Bergquist	315	
	28									

	No.	QTY	COMPONENT DESIGNATION	DESCRIPTION	PARAMETERS	MANUFACTURER P/N	TiL P/N	MANUFACTURER	SUPPLIER	LOT No.
	29	2	U8,9	Shift Store Latch	16 pin	MC14094BCL		Motorola	155	
	30	1	U10	DTMF Dialer	14 pin	TP5088		National	155	
	31	1	U11	Undervoltage Sensing		MC33064P-5		Motorola	155	
	32									
	33	1	T1	Transformer		671-9619		Midcom	246	
			T1 Alternate	Transformer		FTX400	957139	Frost	173	
	34	2	TR1,2	Voltage Suppressor		1.5KE18A		Motorola	155	
	35									
	36	1	VR1	Voltage Regulator	5V	MC78T05CT		Motorola	155	
	37	1	VR3	Voltage Regulator	Variable	LM350T		National	155	
	38									
	39	2	D7,8	Diode	D0-41	MUR115		Motorola	155	
	40	1	D9	Diode		IN5404		Motorola	155	
	41	4	D1,2,3,5	Diode, Zener	5.1V/500mA	1N751		Motorola	155	
	42	4	D4,6,10,11	Diode	Rectifier	1N4148		Motorola	155	
	43	1	D12	Diode		BAV70LT1		Motorola	155	
	44									
	45	1	Y1	Crystal	12 MHz	MP-1-12.000000		M-tron	155	
	46	1	Y2	Crystal	3.579545 MHz	MP-1-3.579545		M-tron	155	
	47	2	for Y1,2	Insulator		C1-192-028		Bivar	325	

	No.	QTY	COMPONENT DESIGNATION	DESCRIPTION	PARAMETERS	MANUFACTURER P/N	TiL P/N	MANUFACTURER	SUPPLIER	LOT No.
	48	1	F1	Fuse, Pico	5Amp/125V	251005		Littlefuse	155	
	49	1	Q7	Transistor		MJE182		Motorola	155	
	50	2	For Q7	Insulator		3223-07AC-60		Berquest	315	
	51	5	Q1,2,3,4,6	Transistor	Can	2N2222A		Motorola	155	
	52	5	for Q1,2,3,4,6	Insulator		121-032		Bivar	325	
	53	1	Q5	Transistor	TO-126	MJE703		Motorola	155	
	54									
	55									
	56	1	L1	Inductor		957151	957151	RL Components	305	
	57	8	L2,3,4,5,12-15	Inductor	22μH/3%	1M-2-22		Dale	155	
	58	1	L17	Inductor	Bead	897052	897052	TiL	377	
	59	1	L16	Inductor	700μH	947101	947101	RL Components	305	
	60									
	61									
	62	6	L6,7,8,9,10,11	Inductor	2.7μH/3%	1M-2-2.7		Dale	155	
	63	5	L18 - 22	Inductor	2.2μH/3%	1M-2-2.2		Dale	155	
	64	13	C5,6,7,9,32,37,39,							
			53,58,67,86,87,103	Cap., Ceramic Block	.1μF/50V/20%	CK05BX104		Centralab	155	
	65									
	66									

	No.	QTY	COMPONENT DESIGNATION	DESCRIPTION	PARAMETERS	MANUFACTURER P/N	TiL P/N	MANUFACTURER	SUPPLIER	LOT No.
	67	7	C10,31,36,38,							
			68,75,92	Cap., Tantalum .1sp	33µF/16V	TAP33M16SP		ITT	440	
	68	3	C51,52,69	Cap., Metal film	.1µF/63V/10%	MKS2 .1 63 10		Wima	315	
	69	4	C56,61,63,65	Cap., Tantalum .1sp	10µF/25V	TAP10M25SP		ITT	440	
	70	1	C57	Cap., Tantalum .1sp	22µF/16V	TAP22M16SP		ITT	440	
	71									
	72	2	C26,54	Capacitor, Metal film	.01µF/63V/5%	MKS2 .01 63 5		Wima	315	
	73	2	C22,23	Cap., Cer. Pl. .1sp	39pF/100V	680-10399		Philips	440	
	74	2	C25,90	Cap., Cer. Pl. .1sp	22pF/100V	681-10229		Philips	155	
	75									
	76	1	C27	Cap., Cer. Pl. .2sp	180pF/100V	630-09181		Philips	155	
	77	1	C102	Cap., Electrolytic	10µF/63V	035-58109		Philips	155	
	78	1	C101	Cap., Electrolytic	100µF/40V	037-57101		Philips	155	
	79	1	C91	Cap., Cer. Pl. .2sp	1800pF/100V	630-09182		Philips	155	
	80									
	81	3	C8,49,50	Capacitor, Electrolytic	330µF/16V	035-55331		Philips	155	
	82	5	C1,2,3,4,100	Capacitor, Electrolytic	330µF/35V	037-50331		Philips	155	
	83	9	C40-48	Cap., Cer. Pl. .1sp	.001µF/100V	630-08102		Philips	440	
	84									
	85									

	No.	QTY	COMPONENT DESIGNATION	DESCRIPTION	PARAMETERS	MANUFACTURER P/N	TiL P/N	MANUFACTURER	SUPPLIER	LOT No.
	86	2	C55,89	Cap., Cer. Pl. .2sp	.01μF/100V	629-09103		Philips	155	
	87	1	C72	Capacitor, Metal film	3300pF/100V/10%	MKS22 3300 100 10		Wima	315	
	88	2	C15,16	Capacitor, Tant. .2sp	22μF/16V	TAP22M16		ITT	155	
	89	7	C11,12,13,17,24,							
			73,74	Capacitor, Metal film	.33μF/50V/10%	MKS2 .33 50 10		Wima	315	
	90									
	91	1	C88	Capacitor, Metal Film	1500pF/250V/5%	FKS2 1500 250 5		Wima	315	
	92	4	C62,64,66,99	Capacitor, Electrolytic	680μF/16V	037-55681		Philips	155	
	93									
	94	3	C14,59,60	Cap., Tantalum .2sp	.47μF/35V	TAP.47M35		ITT	155	
	95	2	C29,71	Capacitor, Metal film	1000pF/100V/5%	FKC2 1000 100 5		Wima	315	
	96	1	C19	Capacitor, Metal film	330pF/100V/5%	FKC2 330 100 5		Wima	315	
	97	1	C70	Capacitor, Metal film	4700pF/100V/10%	FKS2 4700 100 10		Wima	315	
	98	6	C93-98	Capacitor, Surface Mount	.001μF/100V	0805N102J101NT		Nova Cap	404	
	99	1	C78	Capacitor, Surface Mount	270pF/100V	GMC21CG271J100NT		Caltech	404	
	100	6	C77,79,80,81,83,84	Capacitor, Surface Mount	.082μF/100V	0805Z823M101NT		Novacap	264	
	101	1	C82	Normally not installed						
	102									
	103	1	R1	Resistor	649Ω/.6W/1%	MRS25F 649Ω		Philips	155	
	104	1	R2	Resistor	100Ω/1/4W/55	CR25 100Ω		Philips	155	

	No.	QTY	COMPONENT DESIGNATION	DESCRIPTION	PARAMETERS	MANUFACTURER P/N	TiL P/N	MANUFACTURER	SUPPLIER	LOT No.
	105	1	R4	Resistor	470Ω/1/4W/5%	CR25 470Ω		Philips	155	
	106	10	R3,10,30,33,39,							
			42,54,62,63	Resistor	10K/1/4W/5%	CR25 10K		Philips	155	
	107	1	R69	Resistor	10K/.6W/1%	MRS25F 10K		Philips	155	
	108	1	R61	Resistor	100Ω/1/4W/5%	CR25 100Ω		Philips	155	
	109	3	R44,45,65	Resistor	56K/1/4W/5%	CR25 56K		Philips	155	
	110	1	R51	Resistor	4.7K/1/4W/5%	CR25 4.7K		Philips	155	
	111	3	R57,58,59	Resistor	1K/1/4W/5%	CR25 1K		Philips	155	
	112	1	R29	Resistor	2K/62.5mW/5%	CRCW0805 2K		Dale	404	
	113	9	R18,19,20,32,							
			35,38,60,64,66	Resistor	2K/1/4W/5%	CR25 2K		Philips	155	
	114	1	R6	Resistor Module		963249-1	963249-1	TiL	377	
	115	1	R7	Resistor	2K/.6W/1%	MRS25F 2K		Philips	155	
	116	1	R70	Resistor	121K/.6W/1%	MRS25F 121K		Philips	155	
	117	1	R5	Resistor	10Ω/1/4W/5%	CR25 10Ω		Philips	155	
	118	1	R12	Resistor	.2Ω/.4W/5%	RS-1/4 R2		Dale	155	
	119	3	R9,11,31	Resistor	2.7K/1/4W/5%	CR25 2.7K		Philips	155	
	120	1	R15	Resistor	300K/1/4W/5%	CR25 300K		Philips	155	
	121	1	R16	Resistor	2.4K/1/4W/5%	CR25 2.4K		Philips	155	
	122									

	No.	QTY	COMPONENT DESIGNATION	DESCRIPTION	PARAMETERS	MANUFACTURER P/N	TiL P/N	MANUFACTURER	SUPPLIER	LOT No.
	123	2	R14,21	Resistor	1.6K/1/4W/5%	CR25 1.6K		Philips	155	
	124	1	R13	Resistor	24K/.6W/1%	MRS25F 24K		Philips	155	
	125	1	R67	Resistor	681K/.6W/1%	MRS25F 681K		Philips	155	
	126	1	R17	Resistor	150K/1/4W/5%	CR25 150K		Philips	155	
	127	1	R22	Resistor	820Ω/1/4W/5%	CR25 820Ω		Philips	155	
	128	2	R23,24	Potentiometer	10K/3%	3296W-1-103		Bourns	155	
	129	1	R8	Potentiometer	50K/3%	3296X-1-503		Bourns	155	
	130	1	R25	Resistor	2.2Ω/1/4W/5%	CR25 2.2Ω		Philips	155	
	131	1	R26	Resistor	1Ω/1/4W/5%	CR25 1Ω		Philips	155	
	132	1	R27	Resistor	220Ω/1/4W/5%	CR25 220Ω		Philips	155	
	133	1	R28	Resistor	4.7M/1/4W/5%	CR25 4.7M		Philips	155	
	134	1	R36	Resistor	510K/1/4W/5%	CR25 510K		Philips	155	
	135	1	R37	Potentiometer	10K/3%	3296X-1-103		Bourns	155	
	136									
	137	2	R46,53	Resistor	5.1K/1/4W/5%	CR25 5.1K		Philips	155	
	138	2	R47,48	Resistor	26.7K/.6W/1%	MRS25F 26.7K		Philips	155	
	139	1	R49	Resistor	13K/ 1/4W /5%	CR25 13K		Philips	155	
	140	3	R34,55,56	Resistor	100K/ 1/4W /5%	CR25 100K		Philips	155	
	141	1	R43	Resistor	3.3Ω/2W/5%	PRO2J 3.3Ω		Philips	155	
	142	1	R52	Resistor	30K/ 1/4W /5%	CR25 30K		Philips	155	

	No.	QTY	COMPONENT DESIGNATION	DESCRIPTION	PARAMETERS	MANUFACTURER P/N	TiL P/N	MANUFACTURER	SUPPLIER	LOT No.
	143	1	R68	Resistor	51K/ 1/4W /5%	CR25 51K		Philips	155	
	144	2	R50,72	Resistor, Surface	100K/ 62.5mW /5%	CRCW 0805 104		Dale	404	
	145	1	R71	Resistor, Surface	10K/ 62.5mW /5%	CRCW 0805 103		Dale	404	
	146	1	R73	Resistor, Surface	750K/ 62.5mW /5%	CRCW 0805 754		Dale	404	
	147	1	R74	Resistor, Surface	47K/ 62.5mW /5%	CRCW 0805 473		Dale	404	
	148	2	R40,41	Resistor	20K/1/4W/5%	CR25 20K		Philips	155	
	149									
	150	1	J1	Connector "D", Filtered	15 pin, male, 820pF	FCC17A15PA44B		Amphenol	155	
	151	3	J2,3,9	Header, Double Row	8 pin	69192-108		Dupont	150	
	152	2	J4	Header	2 x 3 pin	68490-103		Dupont	150	
	153	2	J7	Header	2 x 7 pin	68490-107		Dupont	150	
	154	1	J8	Header, Double Row	6 pin	69192-106		Dupont	150	
	155	2	J10,14	Header, Double Row	8 pin rt. angle	MTSW-104-09-G-D-430-RA		Samtec	325	
	156	1	J5	Connector	8 pin	76314-104		Dupont	150	
	157									
	158	1	J6	Header, Double Row	20 pin rt. angle	MTSW-110-09-G-D-430-RA		Samtec	325	
	159	1	J13	Header, Double Row	3 pin	68002-103		Dupont	150	
	160	1	J11	Header, Double Row	12 pin 2mm sp.	TW-06-03-G-0-340-100		Samtec	325	
	161	1	J15	Header, Double Row	4 pin	69192-104		Dupont	150	

	No.	QTY	COMPONENT DESIGNATION	DESCRIPTION	PARAMETERS	MANUFACTURER P/N	TiL P/N	MANUFACTURER	SUPPLIER	LOT No.
	162	2	P15	Jumper	2 pin	68786-202		Dupont	150	
	163	1		Tone Board Assembly		TS-64T		Comm. Specialists	118	
			NOTE: U3 on TS64 must be MC33078D					Motorola	155	
	164									
	165									
	166	1	J12	Reference only supplied with Tone board assembly.						
	167	1	RX IN to RX OUT	Wire 30awg	1"	R30B0100		OK Industries	266	
	168	1		Wire, Red, 18awg.	3/16X4 1/2X 3/16"	TEW		Advance Wire	5	
	169	2	for VR1,3	Screw, Pan Phil	S/S	4-40 x 1/4"		Any	168	
	170	2	for VR1,3	Lockwasher	S/S	No. 4		Any	168	
	171	2	for VR1,3	Nut	S/S	4 - 40 #2 Blank		Any		
	172									
	173	A/R		Glue	Hot melt			Bostic	107	
	174	A/R		Nylon washer		W901		Any	160, 120	
	175	A/R		Lacing Cord				Any	155	
	176									
	177									
	178									
	179									

DOCUMENTS ENCLOSED IN THIS SECTION

Module: ***VHF/FM Guard Receiver/Transmitter*** ***Note: Main Rx/TX in all units but TFM-138D***

Module No.	*Document Description*	*Document No.*	*No. Pages*
A2	Schematic Diagram (Refer to notes "-4" version)	955178	1
A2	Component layout	929097	1
A2	Parts List	952269	13

THIS DRAWING CONTAINS DESIGN AND OTHER INFORMATION WHICH ARE THE PROPERTY OF TECHNISONIC INDUSTRIES LIMITED. EXCEPT FOR RIGHTS EXPRESSLY GRANTED BY CONTRACT TO THE CANADIAN OR UNITED STATES GOVERNMENT MAY NOT, IN WHOLE OR IN PART, BE DUPLICATED OR DISCLOSED OR USED FOR MANUFACTURE OF PART DISCLOSED HEREIN, WITHOUT THE PRIOR WRITTEN PERMISSION OF TECHNISONIC INDUSTRIES LIMITED.

REVISIONS

LTR	DESCRIPTION	DATE	APPR
A	CHANGED NOTES AND COMPONENTS	95/04/19	
B	ADDED C24	95/05/15	
C	CHANGED C24 TO C29	95/05/26	
D	ADDED CW INDICATIONS	95/05/29	
E	REVERSED D12/D13 AND R16/R31	95/09/21	
F	REVERSED CONNECTIONS TO L29	95/11/17	
G	ADDED TX VCO FAST LOCK CIRCUIT	95/12/06	
H	MODIFIED SQUELCH CIRCUIT	96/01/15	
J	MODIFIED FOR XTAL HEATER MODULE	96/04/22	
K	UPDATED DESIGNATION BOXES	96/04/29	
L	SEE C.R.# 96789	96/07/17	
M	SEE C.R.# 96818	96/08/28	
N	CHANGED C27 AND C51 TO #808-23109	96/10/07	
P	ADDED NOTES FOR -4 CONFIGURATION R48,51 WAS 6.2K - C.R 98353,98354	98/05/25	
R	ADDED -5 CONFIGURATION - CR# 99499	99/02/01	dmc

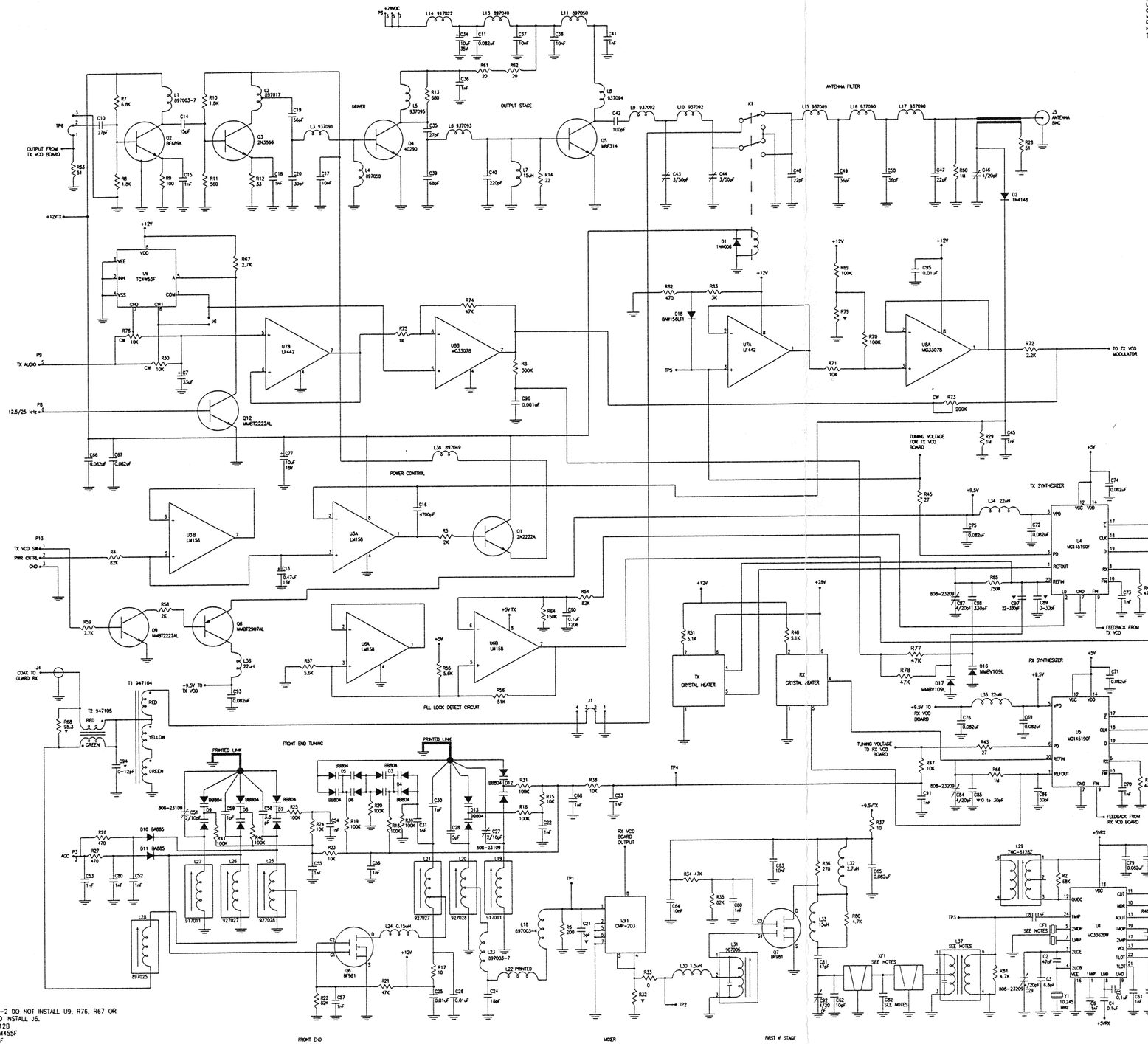

NOTES:
1. FOR 923034-2 DO NOT INSTALL U9, R76, R67 OR Q12 BUT DO INSTALL J6.
   XF1 = 10M12B
   CF1 = CFWM455F
   C82 = 4.7pF
   L37 = 937096
2. FOR 923034-3 INSTALL ALL COMPONENTS EXCEPT J6.
   XF1 = 10M7B
   CF1 = CFZM455F
   C82 = 10pF
   L37 = 957125
3. FOR 923034-4 AND 923034-5 INSTALL ALL COMPONENTS EXCEPT J6.
   XF1 = 10M7B
   CF1 = CFZM455F
   C82 = 10pF
   L37 = 957125
   R46 = 0.082uF CAPACITOR
   C9 = 6.8 K RESISTOR
4. FOR 923034-5 USE THE LONGER WHITE COAX.

HIGHEST DESIGNATION NUMBERS USED							
C98	D18	CF1	J6	K1	L38	MX1	P13
Q12	R86	T2	U9	XF1	Y1	TP6	

DESIGNATIONS NOT USED							
U2	C33	J2	J3	L12	L22	P1	P4
P5	P6	P7	P10	P11	P12	Q10	Q11
R49	R50	R52	R53	D14	D15	C32	

	923034-5
	923034-4
	923034-3
	923034-2
REQ'D	NEXT ASSY USED ON
APPLICATION	

CONTRACT NO.

SIGNATURES	DATE
DRN.	95/02/08
TECHNISONIC MGR.	
DATE	99/02/01

Technisonic Industries

VHF/FM MAIN RX/TX BOARD SCHEMATIC DIAGRAM

SIZE	CODE ID. NO.	DWG. NO.
	38546	955178

SCALE NONE SHEET 1 OF 1

REV R

DWG# 929097Y (VHFMTX.DWG)

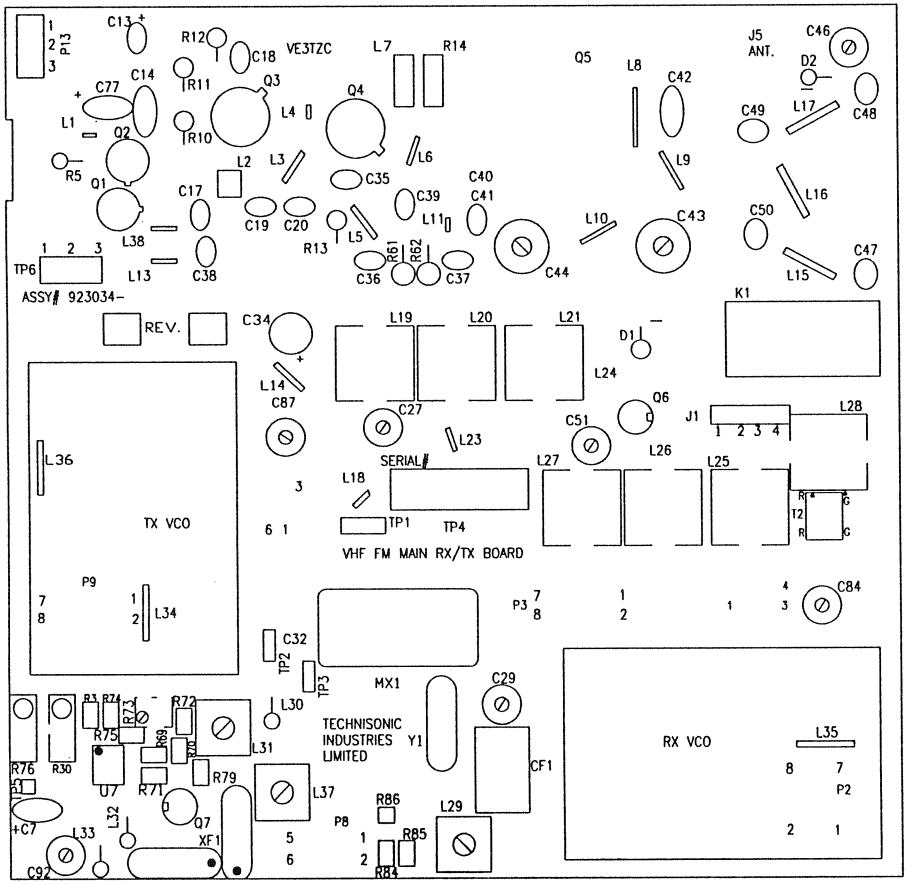

COMPONENT SIDE SILK SCREEN

LEGEND: % Used on -3,-4 Assembly. * Used on -2 Assembly. ● - Used on -2,-3 Assembly ▲- Used on -4 Assembly ♦ - Calibration ■ - Used on -5 Assembly

BATCH No.:

	No.	QTY	COMPONENT DESIGNATION	DESCRIPTION	PARAMETERS	MANUFACTURER P/N	TiL P/N	MANUFACTURER	SUPPLIER	LOT No.
	1	1		P.C.B.		929096	929096	Crimp Circuits	125	
	2									
	3	1	U1	Receiver Chip	Surface Mount	MC3362DW		Motorola	155	
	4	2	U3,6	Operational Amp.	8 pin	LM158D		Motorola	155	
	5	2	U4,5	Synthesizer	Surface Mount	MC145190F		Motorola	155	
	6	1	U7	Dual Bifet OP Amp		LF442CD		Motorola	155	
	7	1	U8	Dual/Quad OP Amp	Surface Mount	MC33078D		Motorola	45	
% ■	8	1	U9	2 Channel Multiplexer		TC4W53F		Toshiba	207	
	9									
	10	2		Crystal Heater Assy.	16MHz	963244-2	963244-2	TiL	377	
	11	1	A2A1	Receiver VCO		923037-1	923037-1	TiL	377	
	12	1	A2A2	Transmitter VCO		923099-2	923099-2	TiL	377	
	13									
	14									

REVISIONS		
	DATE	APP'D.
L	07/10/96	
M	14/04/97	
N	21/5/98	
P	Jan.26/99	

USED ON: VHF/FM MAIN TX/RX BOARD

ASSY.No.: 923034-2, -3, -4, -5

DATE: January 31, 1995

SHEET 1 **OF** 13

TiL technisonic industries ltd

PARTS LIST

NO. **PL-** **952269**

	No.	QTY	COMPONENT DESIGNATION	DESCRIPTION	PARAMETERS	MANUFACTURER P/N	TiL P/N	MANUFACTURER	SUPPLIER	LOT No.
*	15	1	CF1	Ceramic Filter		CFWM455F		Murata Erie	180	
% ■			CF1 Alternate	Ceramic Filter		CFZM455F		Murata Erie	180	
	16	1	MX1	Mixer		CMP-2D3		Synergy	364	
	17	1	K1	Relay	12V	RY12WZ-K		Takamisawa	207	
	18	1	T1	Transformer	1 turn	947104-1		RL Components	305	
	19	1	T2	Transformer	1 turn	947105-1		RL Components	305	
	20									
	21	1	Y1	Crystal	10.245 MHz	MP-1-10.245000		M-tron	155	
	22	1	for Y1	Insulator		C1-192-028		Bivar	325	
	23									
*	24	1	XF1	Crystal Filter	Matched 2 piece	10M15B		Fox	180	
*			XF1 Alternate	Crystal Filter	Matched 2 piece	10M12B		Fox	180	
% ■			XF1 Alternate	Crystal Filter	Matched 2 piece	10M7B		Fox	180	
	25	2	for XF1	Insulator	3 hole	C1-192-028-03		Bivar	325	
	26									
	27	1	Q1	Transistor	Can	2N2222A		Thompson	320	
	28	1	Q2	Transistor	Can	RFS689K		Philips	320	
	29	1	Q3	Transistor	Can	2N3866		MOT, Thompson	155,72	
	30	1	Q4	Transistor	Can	40290		RCA	320	

	No.	QTY	COMPONENT DESIGNATION	DESCRIPTION	PARAMETERS	MANUFACTURER P/N	TiL P/N	MANUFACTURER	SUPPLIER	LOT No.
	31	1	Q5	Transistor	Power	MRF314		Motorola	155	
	32	2	Q6,7	Transistor	Mosfet	BF981		Philips	155	
	33	1	Q8	Transistor	Surface Mount	MMBT2907AL		Motorola	155	
	34	1	Q9	Transistor	Surface Mount	MMBT2222AL		Motorola	155	
% ■	35	1	Q12	Transistor	Surface Mount	MMBT2222AL		Motorola	155	
	36	1	for Q1, Q2	Insulator		121-032		Bivar	325	
	37	1	for Q3	Insulator		513-075		Bivar	325	
	38	1	for Q4	Insulator		7403-09FR09		Berquist	315	
	39	1	for Q4	Heatsink		260-4TH5B		Wakefield	155	
	40	1	D18	Diode	Surface Mount	BAW156LT1		Motorola	155	
	41	1	D1	Diode	Rectifier	1N4006		Motorola	155	
	42	1	D2	Diode	Rectifier	1N4148		Motorola	155	
	43	9	D3,4,5,6,7							
			8,9,12,13	Diode	Surface Mount	BB804-SF3		Motorola	155	
	44									
	45	2	D10,11	Diode	Surface Mount	BA885		Motorola	155	
	46									
	47	2	D16,17	Diode, Zener	Surface Mount	MMBV109L		Motorola	155	
*	48	1	L37	Inductor	Variable	937096	937096	TiL	377	
% ■		1	L37 Alternate	Inductor	Variable	957125	957125	TiL	377	

	No.	QTY	COMPONENT DESIGNATION	DESCRIPTION	PARAMETERS	MANUFACTURER	TiL P/N	MANUFACTURER	SUPPLIER	LOT
	49	1	L1,23	Air Coil	7T	897003-7	897003-7	TiL	377	
	50	1	L18	Air Coil	4T	897003-4	897003-4	TiL	377	
	51									
	52									
	53	1	L19	Inductor	Variable	917011-1	917011-1	TiL	377	
	54	1	L27	Inductor	Variable	917011	917011	TiL	377	
	55	1	L14	Inductor	Bead	917022	917022	TiL	377	
	56	1	L2	RF Transformer		897017	897017	TiL	377	
	57	1	L32	Inductor	2.7μH/3%	1M-2-2.7		Dale	155	
	58	1	L30	Inductor	1.5μH/3%	1M-2-1.5		Dale	155	
	59	2	L7,33	Inductor	15μH/3%	1M-2-15		Dale	155	
	60	3	L34,35,36	Inductor	22μH/3%	1M-2-22		Dale	155	
	61	2	L13,38	Inductor	Bead	897049	897049	TiL	377	
	62	2	L4,11	Inductor	Bead	897050	897050	TiL	377	
	63	2	L20,25	Inductor	Variable	927028	927028	TiL	377	
	64	2	L21,26	Inductor	Variable	927027-1	927027-1	TiL	377	
	65	1	L28	Inductor	Variable	897025	897025	TiL	377	
	66									
	67									

	No.	QTY	COMPONENT DESIGNATION	DESCRIPTION	PARAMETERS	MANUFACTURER P/N	TiL P/N	MANUFACTURER	SUPPLIER	LOT No.
	68	1	L31	Inductor	Variable	907005	907005	TiL	377	
	69	1	L24	Inductor	.15μH/3%	1M-2-.15		Dale	155	
	70	1	L29	Inductor	Variable	7MC-8128Z		Toko	263	
	71									
	72	1	L3	Air Coil		937091	937091	TiL	377	
	73	1	L5	Air Coil		937095	937095	TiL	377	
	74	1	L6	Air Coil		937093	937093	TiL	377	
	75	1	L8	Air Coil		937094	937094	TiL	377	
	76	2	L9,10	Air Coil		937092	937092	TiL	377	
	77	1	L15	Air Coil		937089	937089	TiL	377	
	78	2	L16,17	Air Coil		937090	937090	TiL	377	
	79	14	C1,11,65,66,67,							
			69,71,72,74,75,							
			76,79,83,93	Capacitor	.082μF/100V	0907B 823J 101N		Novacap	264	
	80									
	81	2	C2,81	Capacitor	47pF/50V	0805N 470K 500N		Novacap	264	
	82	1	C24	Capacitor	18pF/50V	0805N 180J 500N		Novacap	264	
	83	1	C16	Capacitor	4700pF/200V	0805N 472J 201N		Novacap	264	
	84	1	C3	Capacitor	6.8pF/50V	0805N 6R8D 500N		Novacap	264	

PARTS LIST No. _____

	No.	QTY	COMPONENT DESIGNATION	DESCRIPTION	PARAMETERS	MANUFACTURER P/N	TiL P/N	MANUFACTURER	SUPPLIER	LOT No.
	85	5	C25,26,63,64,9	Capacitor	.01μF/50V	0805B103K500NT		Novacap	264	
	86	10	C6,8,12,15,45,							
			53,57,60,61,78	Capacitor	.001μF/100V	0805N 102J 101NT		Novacap	264	
	87									
	88	14	C22,23,31,52,							
			54,55,56,68,70,							
			73,80,91,96,98	Capacitor	.001μF/200V	0805B 102K 201N		Novacap	264	
	89									
	90	1	C28	Capacitor	5pF/100V	0805N 5ROD 101N		Novacap	264	
	91	1	C58	Capacitor	3.3pF/50V	0805N 3R3D 500N		Novacap	264	
	92	2	C30,59	Capacitor	1pF/50V	0805N 1ROC 500N		Novacap	264	
	93	2	C47,48	Capacitor, Cer. Pl. .1sp	22pF/100V	680-10229		Philips	440	
	94	2	C49,50	Capacitor, Silver Mica	36pF/300V	DM5-360J		Philips	440	
	95	1	C62	Capacitor	10pF/50V	0805B 100J 500N		Novacap	264	
♦	96	1	C85	Capacitor	5pF/100V	0805N 5R0D 101N		Novacap	264	
			C85 ALT.	Capacitor	Values 0 to 30pF			Novacap	264	
♦	97	1	C89	Capacitor	Do Not Install			Novacap	264	
			C89 ALT.	Capacitor	Values 0 to 30pF			Novacap	264	
♦	98	1	C97	Capacitor	47pF/50V	0805N 470K 500N		Novacap	264	
			C97 ALT.	Capacitor	Values 22 to 330pF			Novacap	264	

	No.	QTY	COMPONENT DESIGNATION	DESCRIPTION	PARAMETERS	MANUFACTURER P/N	TiL P/N	MANUFACTURER	SUPPLIER	LOT No.
	99	1	C10	Capacitor	27pF/50V	0805N 270J 500N		Novacap	264	
	100	1	C86	Capacitor	30pF/50V	0805N 300J 500N		Novacap	264	
	101	1	C88	Capacitor	330pF/50V	0805CG331J9BB0		Novacap	264	
	102									
	103	3	C4,5,90	Capacitor	.1μF/100V	1206N 104J 101N		Novacap	264	
	104	1	C21	Not installed.						
● ■	105	1	C9	Capacitor	.0022μF/50V/10	08052R 222K 9BB0		Philips	155	
▲	OR	1	C9	Resistor	6.8K/62.5mW/5%	CRCW0805 682		Any	155	
	106									
	107	1	C7	Cap., Tantalum .1sp	33μF/16V	TAP33M16SP		ITT	155	
	108	1	C13	Cap., Tantalum .1sp	.47μF/35V	TAP.47M35SP		ITT	440	
	109	1	C77	Cap., Tantalum .2sp	10μF/25V	TAP10M25		ITT	295	
	110	1	C14	Cap., Cer. Pl. .2sp	15pF/100V	681-10159		Philips	155	
	111	3	C17,37,38	Cap., Cer. Pl. .1sp	.01μF/100V	629-08103		Philips	415,440	
	112	3	C18,36,41	Cap., Cer. Pl. .1sp	.001μF/100V	630-08102		Philips	415,440	
	113									
	114	1	C19	Cap., Cer. Pl. .1sp	56pF/100V	680-10569		Philips	415,440	
	115	1	C20	Cap., Cer. Pl. .1sp	39pF/100V	680-10399		Philips	415,440	
	116									
	117									
	118									

	No.	QTY	COMPONENT DESIGNATION	DESCRIPTION	PARAMETERS	MANUFACTURER P/N	TiL P/N	MANUFACTURER	SUPPLIER	LOT No.
	119	1	C35	Cap., Cer. Pl. .1sp	27pF/100V	680-10279		Philips	415,440	
	120	1	C39	Cap., Cer. Pl. . 1sp	68pF/100V	680-10689		Philips	415,440	
	121	1	C40	Capacitor	220pF/200V	700B221KP200X		ATC	307	
	122	1	C42	Cap., Cer. Pl. .2sp	100pF/100V	681-10101		Philips	155	
*	123	1	C82	Capacitor	4.7pF/500V	0805N 4R7D501N		Novacap	264	
% ■			C82 Alternate	Capacitor	10pF/500V	0805N 100D501N		Novacap	264	
	124	1	C94	Capacitor	12pF/500V	0805N 120J501N		Novacap	264	
	125									
	126	2	C27,51	Trim Capacitor	2-10pF	808-23109		Philips	155	
	127	2	C43,44	Trim Capacitor	3-50pF	808-11409		Philips	155	
	128	5	C29,46,84,87,92	Trim Capacitor	4-20pF	808-23209		Philips	155	
	129									
	130	1	C34	Capacitor, Electrolytic	10μF/63V	035-58109		Philips	155	
	131	5	R23,24,38,47,71	Resistor	10K/62.5mW/5%	CRCW0805 103		Dale	135	
	132	1	R2	Resistor	68K/62.5mW/5%	CRCW0805 683		Dale	135	
	133	1	R3	Resistor	300K/62.5mW/5	CRCW0805 304		Dale	135	
	134	1	R75	Resistor	1K/62.5mW/5%	CRCW0805 102		Dale	135	
	135	2	R80,81	Resistor	4.7K/62.5mW/5%	CRCW0805 472		Dale	135	
	136									

	No.	QTY	COMPONENT DESIGNATION	DESCRIPTION	PARAMETERS	MANUFACTURER P/N	TiL P/N	MANUFACTURER	SUPPLIER	LOT No.
	137	1	R9	Resistor	100Ω/62.5mW/5%	CRCW0805 101		Dale	135	
	138	1	R7	Resistor	6.8K/62.5mW/5%	CRCW0805 682		Dale	135	
	139	1	R8	Resistor	1.8K/62.5mW/5%	CRCW0805 182		Dale	135	
	140	11	R16,18,19,20,25,							
			31,39,40,41,69,70	Resistor	100K/62.5mW/5%	CRCW0805 104		Dale	135	
	141	3	R26,27,82	Resistor	470Ω/62.5mW/5%	CRCW0805 471		Dale	135	
	142	2	R28,63	Resistor	51Ω/62.5mW/5%	CRCW0805 510		Dale	135	
	143	2	R56,84	Resistor	51K/62.5mW/5%	CRCW0805 513		Dale	135	
	144	2	R64,85	Resistor	150K/62.5mW/5%	CRCW0805 154		Dale	135	
	145	1	R32	Resistor	Not installed.					
	146	1	R33	Resistor, Jumper	0Ω/1/10W/5%	B54102A1000X60		Siemens	155	
	147	1	R68	Resistor	95.3Ω/62.5mW/1%	CRCW0805 95R3		Dale	404	
	148	3	R1,55,57	Resistor	5.6K/62.5mW/5%	CRCW0805 562		Dale	135	
% ■	149	1	R67	Resistor	2.7K/62.5mW/5%	CRCW0805 272		Dale	135	
	150	1	R83	Resistor	3K/62.5mW/5%	CRCW0805 302		Dale	135	
	151	1	R73	Potentiometer	200K	3224W-1-204E		Bourns	155	
	152	2	R29,66	Resistor	1M/62.5mW/5%	CRCW0805 105		Dale	135	
	153	4	R34,74,77,78	Resistor	47K/62.5mW/5%	CRCW0805 473		Dale	135	
	154	1	R72	Resistor	2.2K/62.5mW/5%	CRCW0805 222		Dale	135	

	No.	QTY	COMPONENT DESIGNATION	DESCRIPTION	PARAMETERS	MANUFACTURER P/N	TiL P/N	MANUFACTURER	SUPPLIER	LOT No.
	155	1	R79	Not installed.						
	156	3	R4,35,54	Resistor	82K/62mW/5%	CRCW0805 823		Dale	135	
	157	1	R36	Resistor	270Ω/62.5mW/5%	CRCW0805 271		Dale	135	
	158	1	R37	Resistor	10Ω/62.5mW/5%	CRCW0805 100		Dale	135	
	159	2	R42,44	Resistor	47K/62.5mW/5%	CRCW0805 473		Dale	135	
	160	2	R43,45	Resistor	27Ω/62.5mW/5%	CRCW0805 270		Dale	135	
	161	1	R65	Resistor	750K/62.5mW/5	CRCW0805 754		Dale	135	
	162									
	163	2	R48,51	Resistor	5.1K/62.5mW/5%	CRCW0805 512		Dale	135	
● ■	164	1	R46	Resistor	8.2K/62.5mW/5%	CRCW0805 822		Dale	135	
▲	OR	1	R46	Capacitor	.082μF/100V	0907B823J101N		Novacap	264	
	165									
	166	1	R59	Resistor	2.7K/62.5mW/5%	CRCW0805 272		Dale	135	
	167	1	R58	Resistor	2K/62.5mW/5%	CRCW0805 202		Dale	135	
	168	1	R6	Resistor	200Ω/125mW/5%	CRCW1206 201		Dale	135	
	169	1	R15	Resistor	10K/125mW/5%	CRCW1206 103		Dale	135	
	170	1	R17	Resistor	10Ω/125mW/5%	CRCW1206 100		Dale	135	
	171	1	R60	Resistor	1M/125mW/5%	CRCW1206 105		Dale	135	
	172	1	R21	Resistor	47K/125mW/5%	CRCW1206 473		Dale	135	
	173									

	No.	QTY	COMPONENT DESIGNATION	DESCRIPTION	PARAMETERS	MANUFACTURER P/N	TiL P/N	MANUFACTURER	SUPPLIER	LOT No.
	174	1	R22	Resistor	82K/125mW/5%	CRCW1206 823		Dale	135	
	175	1	R5	Resistor	2K/1/4W/5%	CR25 2K		Dale	135	
	176	1	R11	Resistor	560Ω/1/4W/5%	CR25 560Ω		Philips	155	
	177	1	R30	Potentiometer	10K	3296W-1-103		Bourns	155	
% ■	178	1	R76	Potentiometer	10K	3296W-1-103		Bourns	155	
	179	1	R86	Thermistor	20K	ID203051		Thermodisk	374	
	180	2	R61,62	Resistor	20Ω/1.6W/5%	PRO2J 20Ω		Philips	155	
	181									
	182	1	R12	Resistor	33Ω/1/4W/5%	CR25 33Ω		Philips	155	
	183	1	R13	Resistor	680Ω/1/4W/5%	CR25 680Ω		Philips	155	
	184	1	R14	Resistor	22Ω/1/4W/5%	CR25 22Ω		Philips	155	
	185	1	R10	Resistor	1.8K/1/4W/5%	CR25 1.8K		Philips	155	
	186									
	187									
	188									
	189									
	190									
	191									
	192									

	No.	QTY	COMPONENT DESIGNATION	DESCRIPTION	PARAMETERS	MANUFACTURER P/N	TiL P/N	MANUFACTURER	SUPPLIER	LOT No.
	193	1	J1	Header	4 pin	68002-104		Dupont	150	
	194	2		Jumper	2 pin	68786-202		Dupont	150	
	195	1	TP6	Header	3 pin	68002-103		Dupont	150	
	196	3	P2,3,9	Connector	8 pin	76314-104		Dupont	150	
■			P2,3,9 ALT.	Connector	8 pin	SLW-104-01-G-D		Semtec	155	
	197	1	P8	Connector	6 pin	76314-103		Dupont	150	
■			P8 ALT.	Connector	6 pin	SLW-103-01-G-D		Semtec	155	
	198	1	P13	Connector	3 pin	76308-103		Dupont	150	
■			P13 ALT.	Connector	3 pin	SLW-103-01-G-S		Semtec	155	
*	199	1	J6	Wire, Buss	24 awg			Any	3	
	200	1	J5	Wire, Buss, 22 awg	1/2" long			Any	155	
	201	4		Wire, Buss, 22 awg				Any	155	
	202									
	203	4		Teflon Sleeving	24 awg			Any	155	
	204	16		Nylon washer		W901		Cords of Canada	325, 160	
	205	1	J4	Cable Assembly	Coaxial	937099	937099	TiL	377	
■			J4 Alt.	Cable Assembly	Coaxial	987270	987270	TiL	377	
	206									
	207	1	Ant. Ground	Lug	#4	7325		Keystone	160	

PARTS LIST No. _____

	No.	QTY	COMPONENT DESIGNATION	DESCRIPTION	PARAMETERS	MANUFACTURER P/N	TiL P/N	MANUFACTURER	SUPPLIER	LOT No.
	208	1		Shield	Front end	938159	938159	CNC	114	
	209	1		Shield	Antenna Filter	938160	938160	CNC	114	
	210	1		Shield	TX/VCO	938161	938161	CNC	114	
	211	1		Shield	PA	938165	938165	CNC	114	
	212	1		Shield	LID - Ant. Filter	938168	938168	CNC	114	
	213	2		Shield	LID - VCO	938164	938164	CNC	114	
	214	1		Shield	VCO	938163	938163	CNC	114	
	215	1		Shield		938186	938186	CNC	114	
	216	1		Shield		938187	938187	CNC	114	
	217	1		Shield		938188	938188	CNC	114	
	218									
	219									
	220									
	221	2		Thermal Insulator		967184	967184	TiL	377	
	222									
	223									
	224	1	for Q5	Wire, Buss 22 awg				Any	155	
	225	1		Fingers		908009	908009	Instrument Specialist	30	
	226									

DOCUMENTS ENCLOSED IN THIS SECTION

Module:	*VHF/FM Main/DF Receiver Board*	*Note: Guard Rx board all units but TFM-138D*	
Module No.	***Document Description***	***Document No.***	***No. Pages***
A3	Schematic Diagram	985336	1
A3	Component Layout	989931	1
A3	Parts List	982479	8

THIS DRAWING CONTAINS DESIGN AND OTHER INFORMATION WHICH ARE THE PROPERTY OF TECHNISONIC INDUSTRIES LIMITED. EXCEPT FOR RIGHTS EXPRESSLY GRANTED BY CONTRACT TO THE CANADIAN OR UNITED STATES GOVERNMENT MAY NOT, IN WHOLE OR IN PART, BE DUPLICATED OR DISCLOSED OR USED FOR MANUFACTURE OF PART DISCLOSED HEREIN, WITHOUT THE PRIOR WRITTEN PERMISSION OF TECHNISONIC INDUSTRIES LIMITED.

REVISIONS			
LTR	DESCRIPTION	DATE	APPR
A	R55, R56 added - See. C.R. 98400	1/7/98	
B	J3 added - See. C.R. 98400	9/7/98	

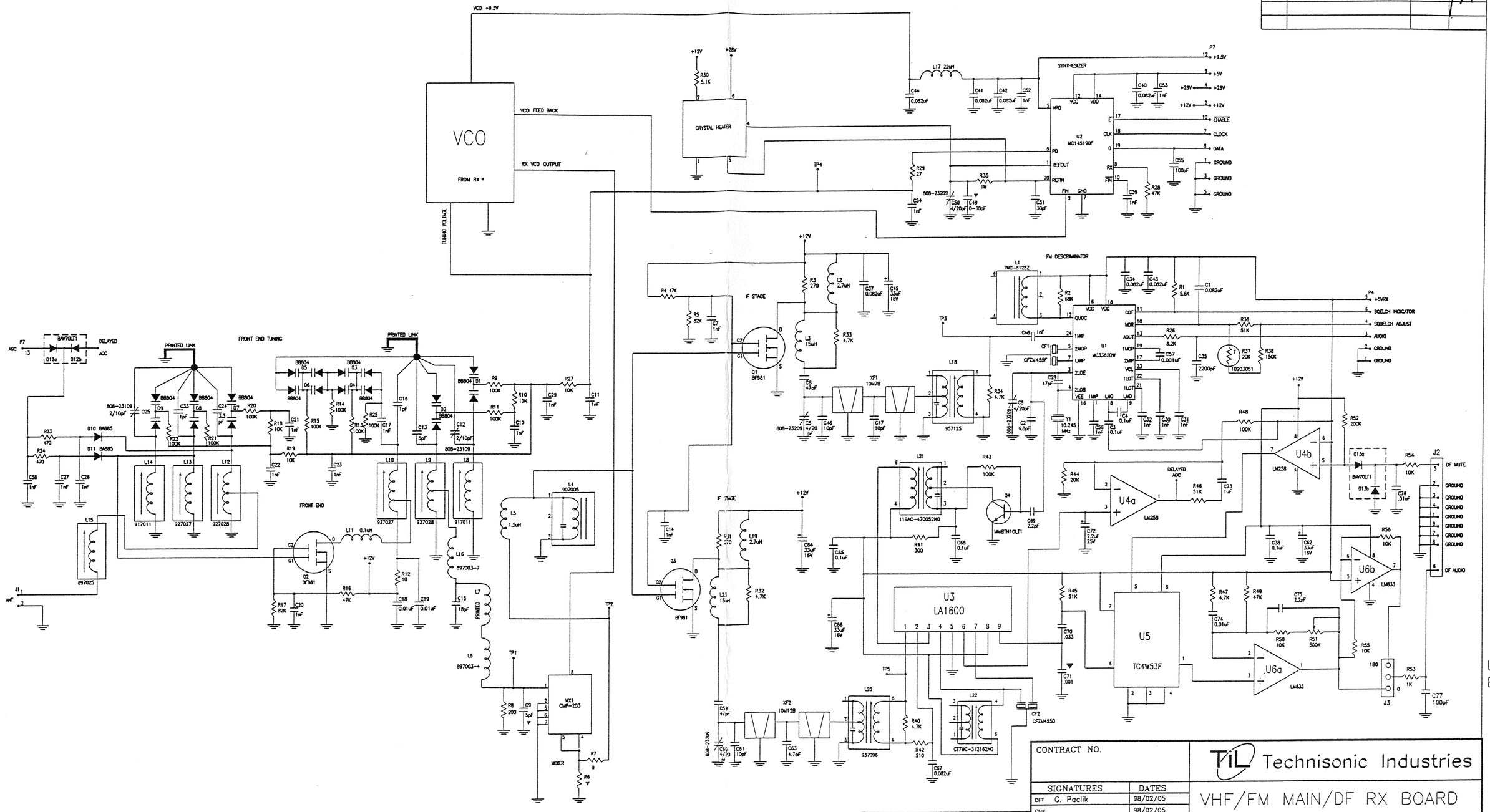

HIGHEST DESIGNATION NUMBERS USED							
C77	Y1	D13	J3	L23	MX1	P7	Q4
R56	U6	XF2	CF2	TP5			

DESIGNATIONS NOT USED							
P1	P2	P3	P5	P6	CJ6		

NOTES:

REQ'D	NEXT ASSY	USED ON
		983355-1
APPLICATION		

CONTRACT NO.

SIGNATURES	DATES
DFT G. Paclik	98/02/05
CHK	98/02/05
TECHNISONIC APP'D	

Technisonic Industries

VHF/FM MAIN/DF RX BOARD SCHEMATIC DIAGRAM

SIZE	CODE ID. NO.	DWG. NO.
	38546	985336
SCALE NONE		SHEET 1 OF 1

Drawing No. 989931B

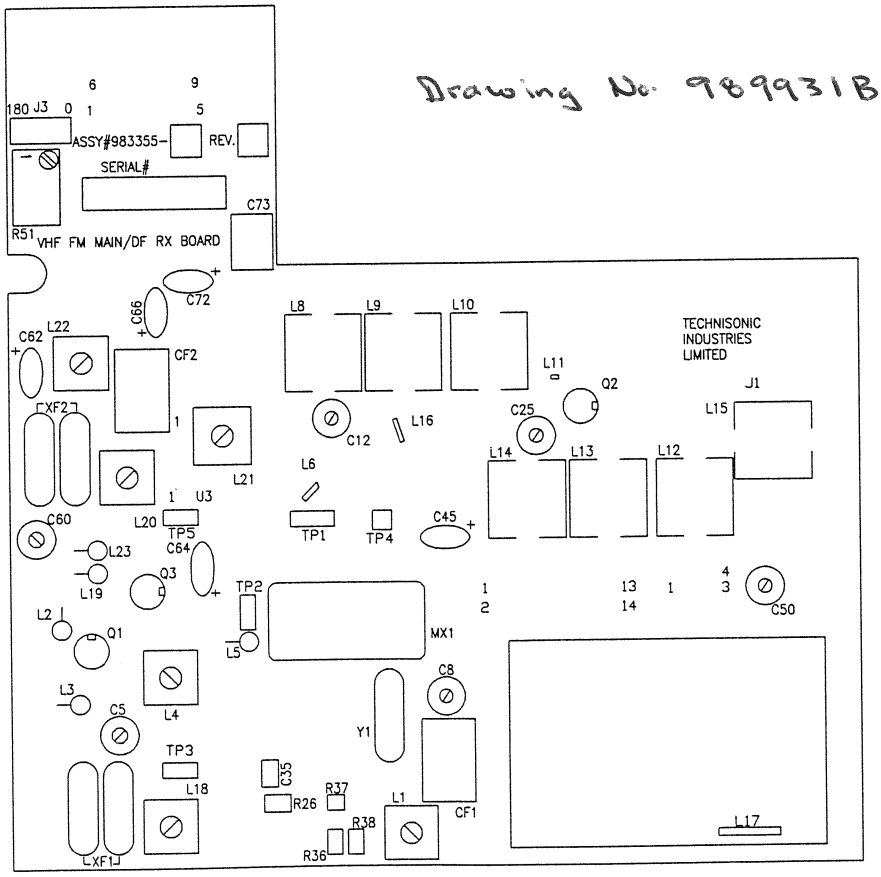

COMPONENT SIDE SILK SCREEN

LEGEND: ♦ - Calibration

BATCH No.:

	No.	QTY	COMPONENT DESIGNATION	DESCRIPTION	PARAMETERS	MANUFACTURER P/N	TiL P/N	MANUFACTURER	SUPPLIER	LOT No.
	1	1		PCB		989931	989931	Crimp Circuits	125	
	2	1	U1	Receiver Chip	Surface Mount	MC3362DW		Motorola	155	
	3	1	U2	Synthesizer	Surface Mount	MC145190F		Motorola	155	
	4	1	U3	Dual Converion Receiver		LA1600		Sanyo	328	
	5	1	U4	Operational Amplifier	8 pin surf. mount	LM258D		Motorola	155	
	6	1	U5	2 Channel Multiplexer		TC4W53F		Toshiba	207	
	7	1	U6	Audio Amplifier	8 pin surf. mount	LM833D		National	155	
	8	1	MX1	Mixer		CMP2D3		Synergy	364	
	9	1	A2A1	Receiver VCO		923037-1	923037-1	TiL	377	
	10	1	CF1	Ceramic Filter		CFZM455F		Murata Erie	180	
	11	1	CF2	Ceramic Filter		CFZM455D		Murata Erie	180	
	12	1		Crystal Heater Assy.	16 MHz	963244-2	963244-2	TiL	377	
	13									
	14	1 set	XF2	Crystal Filter	Matched 2 piece	10M12B		Fox	180	
	15	1 set	XF1	Crystal Filter	Matched 2 piece	10M7B		Fox	180	

REVISIONS		
	DATE	APP'D.
N/C	May 31/98	
A	JUNE 10/98	
B	July 10/98	

USED ON: **VHF/FM MAIN /DF RECEIVER BOARD**

ASSY.No.: 983355-1

DATE: May 31/98

SHEET 1 **OF** 8

TiL technisonic industries ltd

PARTS LIST

NO. **PL-** 982479

	No.	QTY	COMPONENT DESIGNATION	DESCRIPTION	PARAMETERS	MANUFACTURER P/N	TiL P/N	MANUFACTURER	SUPPLIER	LOT No.
	16									
	17									
	18	1	Y1	Crystal	10.245 MHz	MP-1-10.245000		M-tron	155	
	19									
	20	4	for XF1,2	Insulator	3 hole	C1-192-028-3		Bivar	325	
	21	1	for Y1	Insulator	2 hole	C1-192-028		Bivar	325	
	22									
	23	3	Q1,2,3	Transistor Mosfet	Case 305A-01	BF981		Philips	320	
	24	1	Q4	Transistor	Surface Mount	MMBTH10LT1		Motorola	50	
	25									
	26	9	D1-9	Diode, Varactor	Surface Mount	BB804-SF3		Siemens	320	
	27	1	D10,11	Diode, Pin	Surface Mount	BA885		Siemens	320	
	28	2	D12,13	Diode	Surface Mount	BAV70LT1		Motorola	155	
	29									
	30	1	L1	Inductor	Variable	7MC-8128Z		Toko	263	
	31	2	L2,19	Inductor	2.7μH/3%	1M-2-2.7		Dale	155	
	32	1	L5	Inductor	1.5μH/3%	1M-2-1.5		Dale	155	
	33	1	L3	Inductor	15μH/3%	1M-2-15		Dale	155	
	34	1	L4	Inductor	Variable	907005	907005	TiL	377	

	No.	QTY	COMPONENT DESIGNATION	DESCRIPTION	PARAMETERS	MANUFACTURER P/N	TiL P/N	MANUFACTURER	SUPPLIER	LOT No.
	35	1	L6	Air, Coil	4T	897003-4	897003-4	Til	377	
	36	1	L8	Inductor	Variable	917011-1	917011-1	TiL	377	
	37	1	L14	Inductor	Variable	917011	917011	TiL	377	
	38	2	L9,12	Inductor	Variable	927028	927028	TiL	377	
	39	2	L10,13	Inductor	Variable	927027-1	927027-1	TiL	377	
	40	1	L15	Inductor	Variable	897025	897025	TiL	377	
	41	1	L11	Inductor	.1μH/3%	1M-2-.10		Dale	155	
	42	1	L16	Air Coil	7T	897003-7	897003-7	TiL	377	
	43									
	44									
	45									
	46	1	L17	Inductor	22μH/3%	1M-2-22		Dale	155	
	47	1	L23	Inductor	15μH/3%	1M-2-15		Dale	155	
	48	1	L18	Inductor	Variable	957125	957125	TiL	377	
	49	1	L20	Inductor	Variable	937096	937096	TiL	377	
	50	1	L21	Inductor	Variable	119AC-470052N0		Toko	263	
	51	1	L22	Inductor	Variable	CT7MC-312162N0		Toko	263	
	52									
	53									

	No.	QTY	COMPONENT DESIGNATION	DESCRIPTION	PARAMETERS	MANUFACTURER P/N	TiL P/N	MANUFACTURER	SUPPLIER	LOT No.
	54	9	C1,34,37,40,41,							
			42,43,44,67	Capacitor	.082μF/100V	0907B 823J 101		Novacap	264	
	55	1	C15	Capacitor	18pF/500V	0805N 180J 501N		Novacap	264	
	56	4	C5,8,50,60	Trim Capacitor	4/20pF	808-23209		Philips	155	
	57									
	58									
	59	3	C6,28,59	Capacitor	47pF/50V	0805N 470J 500N		Novacap	264	
	60	1	C2	Capacitor	6.8pF/500V	0805N 6R8J 501N		Novacap	264	
	61	5	C3,4,38,65,68	Capacitor	.1μF/100V	1206N104J101N		Novacap	264	
	62									
	63	10	C7,20,30,31,							
			32,48,52,53,							
			56,58	Capacitor	.001μF/100V	0805B102K101N		Novacap	264	
♦	64	1	C71	Capacitor	.001μF/100V	0805B102K101N		Novacap	264	
	65	13	C10,11,14,17,							
			21,22,23,26,							
			27,29,39,54,57	Capacitor	.001μF/200V	0805B102K201N		Novacap	264	
	66									
	67									

PARTS LIST No. 982479 REV.: B

	No.	QTY	COMPONENT DESIGNATION	DESCRIPTION	PARAMETERS	MANUFACTURER P/N	TiL P/N	MANUFACTURER	SUPPLIER	LOT No.
	68									
	69	1	C13	Capacitor	5pF/100V	0805N5ROD101N		Novacap	264	
	70	1	C9	Not installed.						
	71	2	C12,25	Trim Capacitor	2-10pF	808-23109		Philips	155	
	72	2	C16,33	Capacitor	1pF/50V	0805N1ROC500NT		Novacap	264	
	73	4	C18,19,74,76	Capacitor	.01μF/50V	0805B103K500NT		Novacap	264	
	74	1	C24	Capacitor	3.3pF/50V	0805N3R3D500NT		Novacap	264	
	75	1	C46	Capacitor	10pF/50V	0805B100J500N		Novacap	264	
	76	1	C63	Capacitor	4.7pF/500V	0805N4R7D501N		Novacap	264	
	77	2	C47 ,61	Capacitor	10pF/500V	0805N100D501N		Novacap	264	
	78									
	79	1	C73	Capacitor	1μF/63V/5%	MK52 1.0 63 5		Wima	315	
	80	1	C35	Capacitor	2200pF/50V	08052R222K9BB2		Philips	155	
	81	1	C70	Capacitor	.033μF/50V	08052R333K9BB2		Philips	155	
	82									
	83									
♦	84	1	C49	Capacitor	5pF/100V	0805N5R0D101N		Novacap	264	
			C49 ALT.	Capacitor	Values 0 to 30pF			Novacap	264	
	85	1	C51	Capacitor	30pF/500V	0805N300J501N		Novacap	264	
	86									

	No.	QTY	COMPONENT DESIGNATION	DESCRIPTION	PARAMETERS	MANUFACTURER P/N	TiL P/N	MANUFACTURER	SUPPLIER	LOT No.
	87	2	C55,77	Capacitor	100pF/100V	0805N101J101N		Novacap	264	
			C55,77 Alternate	Capacitor	100pF/63V	B37940K5101J62		Novacap	264	
	88	4	C45,62,64,66	Cap., Tantalum .2sp	33μF/16V	TAP33M16		ITT	155	
	89	1	C72	Capacitor	2.2μF/25V	TAP225K025CCS		ITT	155	
	90	2	C69,75	Capacitor	2.2pF/50V	08052R223K9BB2		Philips	155	
	91	2	R3,31	Resistor	270Ω/62.5mW/5%	CRCW0805 271		Dale	135	
	92	3	R4,28,49	Resistor	47K/62.5mW/5%	CRCW0805 473		Dale	135	
	93	1	R5	Resistor	82K/62.5mW/5%	CRCW0805 823		Dale	135	
	94	1	R7	Resistor, Jumper	0Ω/1/10W/5%	B54102A1000X 60		Dale	135	
	95	1	R6	Not installed.						
	96	1	R8	Resistor	200Ω/125mW/5%	CRCW1206 201		Dale	135	
	97	11	R9,11,13,14,15,							
			20,21,22,25,							
			43,48	Resistor	100K/62.5mW/5%	CRCW0805 104		Dale	135	
	98	1	R10	Resistor	10K/125mW/5%	CRCW1206 103		Dale	135	
	99	1	R12	Resistor	10Ω/125mW/5%	CRCW1206 100		Dale	135	
	100	1	R16	Resistor	47K/125mW/5%	CRCW1206 473		Dale	135	
	101	1	R17	Resistor	82K/125mW/5%	CRCW1206 823		Dale	135	

PARTS LIST No. 982479 REV.: B

	No.	QTY	COMPONENT DESIGNATION	DESCRIPTION	PARAMETERS	MANUFACTURER P/N	TiL P/N	MANUFACTURER	SUPPLIER	LOT No.
	102	7	R18,19,27,50,54							
			55,56	Resistor	10K/62.5mW/5%	CRCW0805 103		Dale	135	
	103	2	R23,24	Resistor	470Ω/62.5mW/5%	CRCW0805 471		Dale	135	
	104	1	R26	Resistor	8.2K/62.5mW/5%	CRCW0805 822		Dale	135	
	105	1	R2	Resistor	68K/62.5mW/5%	CRCW0805 683		Dale	135	
	106	1	R29	Resistor	27Ω/62.5mW/5%	CRCW0805 270		Dale	135	
	107	1	R30	Resistor	5.1K/62.5mW/5%	CRCW0805 512		Dale	135	
	108									
	109									
	110		R52	Resistor	200K/62.5mW/5	CRCW0805 204		Dale	135	
	111		R44	Resistor	20K/62.5mW/5%	CRCW0805 203		Dale	135	
	112		R41	Resistor	300Ω/62.5mW/5%	CRCW0805 301		Dale	135	
	113		R42	Resistor	510Ω/62.5mW/5%	CRCW0805 511		Dale	135	
	114									
	115	1	R35	Resistor	1M/62.5mW/5%	CRCW0805 105		Dale	135	
	116	1	R1	Resistor	5.6K/62.5mW/5%	CRCW0805 562		Dale	135	
	117	5	R32,33,34,40,47	Resistor	4.7K/62.5mW/5%	CRCW0805 472		Dale	135	
	118	3	R36,45,46	Resistor	51K/62.5mW/5%	CRCW0805 513		Dale	135	
	119	1	R38	Resistor	150K/62.5mW/5	CRCW0805 154		Dale	135	
	120	1	R53	Resistor	1K/62.5mW/5%	CRCW0805 102		Dale	135	

PARTS LIST No. _____

	No.	QTY	COMPONENT DESIGNATION	DESCRIPTION	PARAMETERS	MANUFACTURER P/N	TiL P/N	MANUFACTURER	SUPPLIER	LOT No.
	121	1	R51	Potentiometer	500K/3%	3296W-1-504		Bourns	155	
	122	1	R37	Thermistor	20K	ID203051		Thermodisk	374	
	123	1	J1	Right Angle Header	2 pin	69191-102		Dupont	150	
	124	1	J2	D Connector	9 pin Female	745988-4		Amp	195	
	125	2	for J2	Lockwasher	S/S	No.4		Any	193	
	126	2	for J2	Nut	S/S	No. 2 Blank 4-40		Any	193	
	127	2	for J2	Screw, Pan Phil	S/S	4-40x5/16"		Any	193	
	128	1	J3	Header, Single Row	3 pin	68002-103		Berg	76	
	129	1	for J3	Jumper	2 pin	68786-102		Berg	76	
	130	1	P4	Connector	6 pin	76314-103		Dupont	150	
	131	1	P7	Connector	14 pin	76314-107		Dupont	150	
	132	1		Thermal Insulator		967184	967184	TiL	377	
	133	2		Wire, Buss 22awg				Any	155	
	134	2		Teflon, Sleeving	24awg			Any	155	
	135	A/R		Nylon Washer		W901		Cords	325,160	
	136	1		Shield		938162		CNC	114	
	137	1		Shield		938164		CNC	114	
	138	1		Shield		938163		CNC	114	
	139	1		Shield		938189		CNC	114	
	140	1		Shield		938190		CNC	114	

DOCUMENTS ENCLOSED IN THIS SECTION

Module: ***FM Front Panel Assembly 28V - Note: Updated panel w/fingerguards***

Module No.	*Document Description*	*Document No.*	*No. Pages*
A4	Front Panel Assembly - parts list	982510	3
A4	Front Panel sub-assembly - parts list (Front panel , lens backlight board)	982511	1
A4A1	Airborne keypad board - schematic	975323	1
A4A1	Component Layout	979921	1
A4A1	Parts List	972467	1
A4A2	FM Display Board - Schematic	985352	1
A4A2	Parts List	982506	1
A4A3	FM Interface board - schematic	985353	1
A4A3	Component Layout	989997	1
A4A3	Parts List	982507	3
A4A4	FM Switch Board - Schematic	985354	1
A4A4	Component Layout	989998	1
A4A4	Parts List	982508	1

NOTE:	BATCH No.:

	No.	QTY	COMPONENT DESIGNATION	DESCRIPTION	PARAMETERS	MANUFACTURER P/N	TiL P/N	MANUFACTURER	SUPPLIER	LOT No.
			NOTE: Select 1 piece each from items 1 + 4 as required.							
	1	1	TFM 138 Series	Front Panel Sub-assy.	28V Green	983378-1	983378-1	TiL	377	
	or	1	TFM 138 Series	Front Panel Sub-assy.	28V Red	983378-2	983378-2	TiL	377	
	or	1	TFM 150	Front Panel Sub-assy.	28V Green	983378-3	983378-3	TiL	377	
	or	1	TFM 150	Front Panel Sub-assy.	28V Red	983378-4	983378-4	TiL	377	
	or	1	TFM 403	Front Panel Sub-assy.	28V Green	983378-5	983378-5	TiL	377	
	or	1	TFM 403	Front Panel Sub-assy.	28V Red	983378-6	983378-6	TiL	377	
	or	1	TFM 138D	Front Panel Sub-assy.	28V Green	983378-7	983378-7	TiL	377	
	or	1	TFM 138D	Front Panel Sub-assy.	28V Red	983378-8	983378-8	TiL	377	
	or	1	TFM 30	Front Panel Sub-assy.	28V Green	983378-9	983378-9	TiL	377	
	or	1	TFM 30	Front Panel Sub-assy.	28V Red	983378-10	983378-10	TiL	377	

REVISIONS		
	DATE	APP'D.
N/C	MAR 2/99	

USED ON: FM FRONT PANEL ASSY. 28V

ASSY.No.: 983377-1,-2,-3,-4,-5,-6,-7,-8,-9,-10

DATE: MARCH 2, 1999

SHEET 1 **OF** 3

TiL technisonic industries ltd

PARTS LIST

NO. **PL-** 982510

	No.	QTY	COMPONENT DESIGNATION	DESCRIPTION	PARAMETERS	MANUFACTURER P/N	TiL P/N	MANUFACTURER	SUPPLIER	LOT No.
	2	1	A4A1	Airborne Keypad C.C. Assy.		973349-1	973349-1	TiL	377	
	3									
	4	1	A4A2	Display C.C. Assy.	Green	983372-1	983372-1	TiL	377	
		or	A4A2	Display C.C. Assy.	Red	983372-2	983372-2	TiL	377	
	5									
	6	1	A4A3	Interface C.C. Assy.		983373-1	983373-1	TiL	377	
	7									
	8	1	A4A4	Switch C.C. Assy.		983374-1	983374-1	TiL	377	
	9									
	10									
	11	1	R1/SW1	Potentiometer	10K/Switch	270WA6350		CTS	130	
	12	1	R2	Potentiometer	10K	550YR9997		CTS	130	
	13									
	14									
	15									
	16	1 set		Buttons		987248	988457	TiL	377	
	17									
	18									

PARTS LIST No. 982510 REV.: N/C SHEET 3 OF 3

	No.	QTY	COMPONENT DESIGNATION	DESCRIPTION	PARAMETERS	MANUFACTURER P/N	TiL P/N	MANUFACTURER	SUPPLIER	LOT No.
	19	2		Screw, Flat Phil	100° Black Oxide	4-40 x 5/16"		Any	145, 5	
	20									
	21	8		Wire, Solid, 22awg	1 1/2" long			Any	155	
	22	6		Heatshrink	1/8"x5/8" long	FIT 105 1/8"		Alpha	155	
	23	2		Knob		KLN500B1/8		Alco	155	
	24	1		Cap		8018-2		C + K	180	
	25									
	26									
	27									
	28									
	29									
	30									
	31									
	32									
	33									
	34									
	35									
	36									

LEGEND:

BATCH No.:

	No.	QTY	COMPONENT DESIGNATION	DESCRIPTION	PARAMETERS	MANUFACTURER P/N	TiL P/N	MANUFACTURER	SUPPLIER	LOT No.
	1									
	2	1		Front Panel ▲		997272-▲	997272	TiL	377	
			NOTE: ▲ - For appropriate Dash No. and Model No. see S.C.D.							
	3									
	4	1		Lens, Plastic	Green	938185-1	938185-1	TiL	377	
	or			Lens, Plastic	Red	938185-2	938185-2	TiL	377	
	or			Lens, Glass	Green	968297-1	968297-1	TiL	377	
	or			Lens, Glass	Red	968297-2	968297-2	TiL	377	
	5									
	6	1		Lens Frame		988409	988409	Pro Plastics	287	
	7									
	8	1		Backlight Board Assy.	28V	943163-1	943163-1	TiL	377	
	9	A/R		Loctite	See SSP for type			Loctite	191	
	10	A/R		RTV		3140		Dow Corning	277	

REVISIONS		
	DATE	APP'D.
N/C	MAR 2/99	

USED ON: FM FRONT PANEL SUB-ASSEMBLY 28V

ASSY.No.: 983378-1,-2,-3-,4,-5,-6,-7,-8,-9,-10

DATE: MARCH 2, 1999

SHEET 1 **OF** 1

TiL technisonic industries ltd

PARTS LIST

NO. **PL-** 982511

THIS DRAWING CONTAINS DESIGN AND OTHER INFORMATION WHICH ARE THE PROPERTY OF TECHNISONIC INDUSTRIES LIMITED. EXCEPT FOR RIGHTS EXPRESSLY GRANTED BY CONTRACT TO THE CANADIAN OR UNITED STATES GOVERNMENT MAY NOT, IN WHOLE OR IN PART, BE DUPLICATED OR DISCLOSED OR USED FOR MANUFACTURE OF PART DISCLOSED HEREIN, WITHOUT THE PRIOR WRITTEN PERMISSION OF:

TECHNISONIC INDUSTRIES LIMITED.

REVISIONS

LTR	DESCRIPTION	DATE	APPR.
A	SEE C.R.# 99502	02/03/99	mc

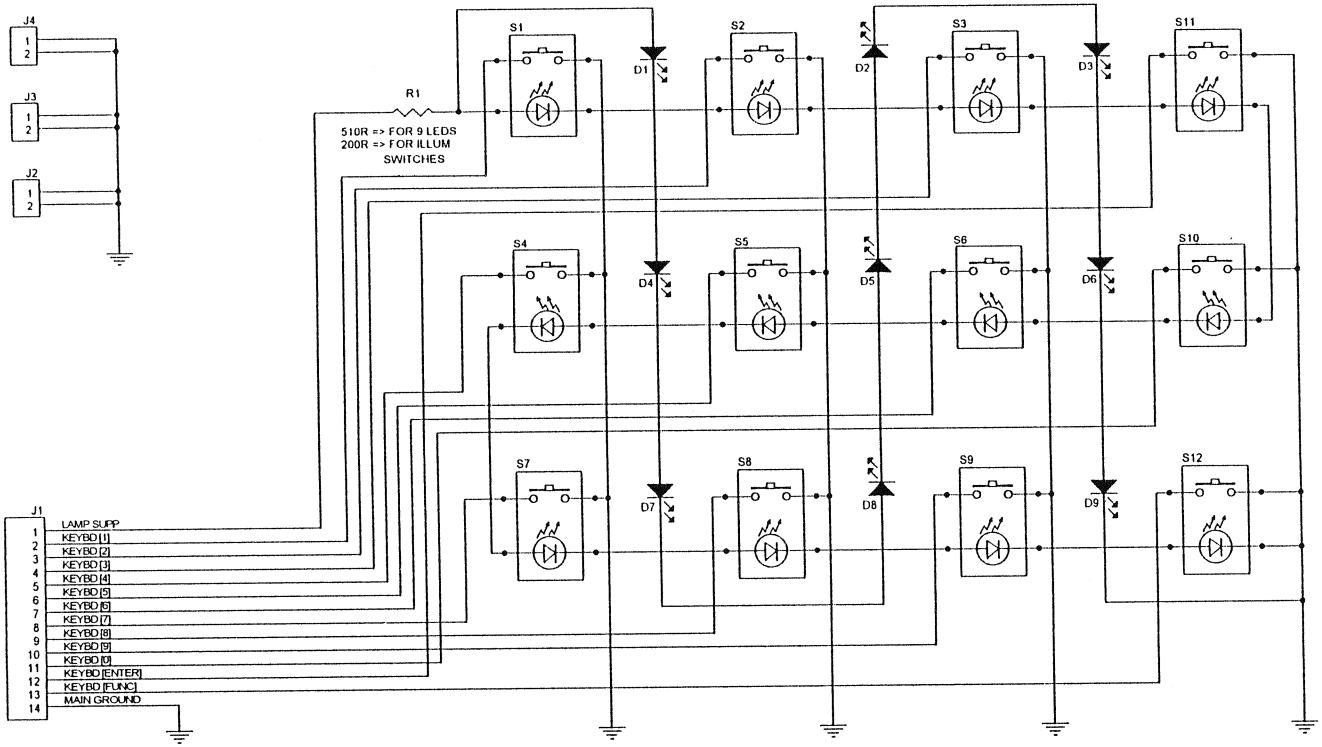

NOTE: D1 -> D9 NOT USED IN CONJUNCTION WITH ILLUMINATED SWITCHES (S1 -> S12)

HIGHEST DESIGNATION(S) USED							
S12	D9	J4	R1				

DESIGNATION(S) NOT USED							

Tolerances:
ALL DIMENSIONS ARE IN INCHES
UNLESS SPECIFIED OTHERWISE STATED
#.# ----------> ± 0.1
#.## ----------> ± 0.01
#.### ---------> ± 0.001
ANGLES ----> 0.5°
HOLE DIA. --> ±0.003

Application / Used On:

973349-1

Date: Tuesday, November 18, 1997
Drawn:
Date: FEB 3 /99
Approved:

Technisonic Industries Ltd.
250 Watline Ave.
Mississauga, Ontario L4Z 1P4

TITLE: AIRBORNE KEYPAD BOARD

Size:	Cage Code:	DWG #:	REV:
A	38546	975323	A

Scale: | Print: 99.02.03.09.21.00 | Page: 1 of 1

DWG # 979921

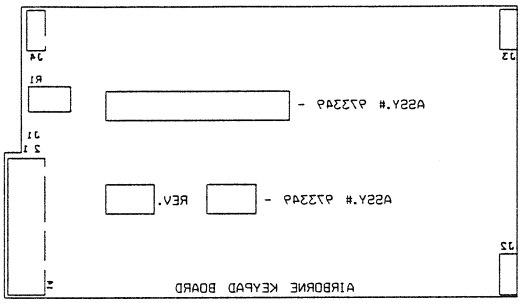

SOLDER SIDE SILKSCREEN
TO BE SILKSCREENED 'WHITE'

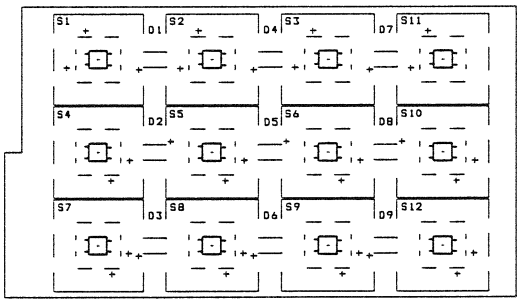

COMPONENT SIDE SILKSCREEN
TO BE SILKSCREENED 'BLACK'

LEGEND: ● - NOT USED

BATCH No.:

	No.	QTY	COMPONENT DESIGNATION	DESCRIPTION	PARAMETERS	MANUFACTURER P/N	TiL P/N	MANUFACTURER	SUPPLIER	LOT No.
	1	1		PCB		979921	979921	Cripm Circuits	125	
	2									
	3	12	S1-12	Switch/ LED	Tactile	TL1240YF160Q		Eswitch	404	
	4									
	5	1	J1	Header, Double Row	14 Pin	69192-114		Berg Electronics	108	
	6									
	7	3	J2-4	Header, Single Row	2 Pin	68002-102		Berg Electronics	108	
	8									
	9	1	R1	Resistor	200Ω/125mW/5%	RC01J 200R		Philips	155	
●	10	1	R1 Alt.	Resistor	510Ω/125mW/5%	RC01J 510R		Philips	155	
	11									
●	12	9	D1-9							
	13									
	14									
	15									

REVISIONS		
LTR.	DATE	APP'D.
N/C	Jan.29/99	

USED ON: AIRBORNE
KEYPAD BOARD 28V

ASSY.No.: 973349-1

DATE: JANUARY 29, 1999

SHEET 1 **OF** 1

TiL technisonic industries ltd

PARTS LIST

NO. **PL-** 972467

THIS DRAWING CONTAINS DESIGN AND OTHER INFORMATION WHICH ARE THE PROPERTY OF TECHNISONIC INDUSTRIES LIMITED. EXCEPT FOR RIGHTS EXPRESSLY GRANTED BY CONTRACT TO THE CANADIAN OR UNITED STATES GOVERNMENT MAY NOT, IN WHOLE OR IN PART, BE DUPLICATED OR DISCLOSED OR USED FOR MANUFACTURE OF PART DISCLOSED HEREIN, WITHOUT THE PRIOR WRITTEN PERMISSION OF TECHNISONIC INDUSTRIES LIMITED.

REVISIONS

LTR	DESCRIPTION	DATE	APPR

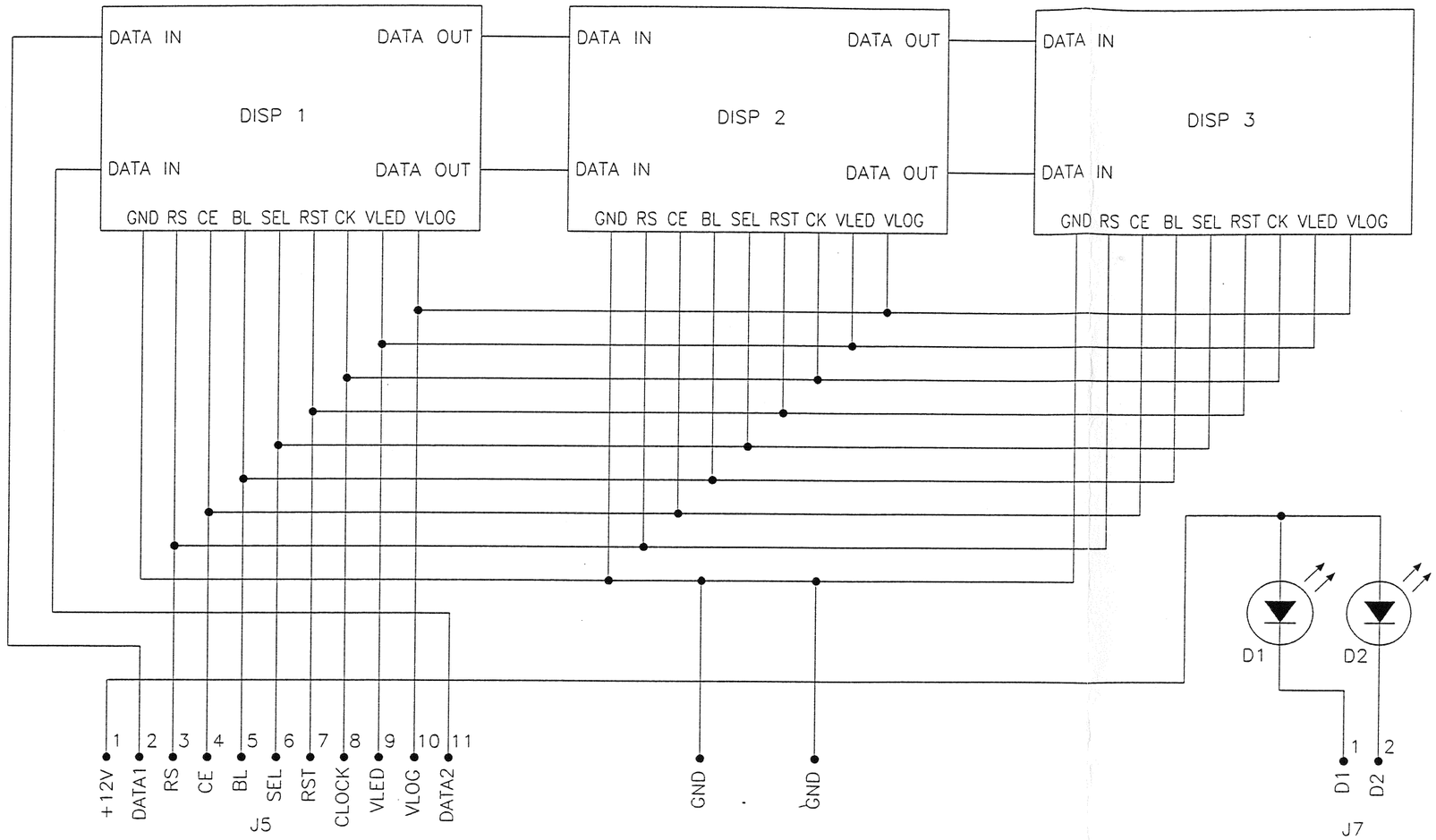

REV N/C

NOTE: 983372-1 = ALL LEDS AND DISPLAYS GREEN, 983372-2 = ALL LEDS AND DISPLAYS RED.

HIGHEST DESIGNATION NUMBERS USED							
D2	J7	DISP3					

DESIGNATIONS NOT USED							
J1	J2	J3	J4	J6			

		983372-2
		983372-1
REQ'D	NEXT ASSY	USED ON
APPLICATION		

CONTRACT NO.

Technisonic Industries

SIGNATURES	DATES
DFT Steve McIntosh	98/11/09

TECHNISONIC APP'D Steve McIntosh

FM DISPLAY BOARD SCHEMATIC DIAGRAM

SIZE	CODE ID. NO.	DWG. NO.
	38546	985352
SCALE NONE		SHEET 1 OF 1

LEGEND: $ -1 Green Version * -2 Red Version

BATCH No.:

	No.	QTY	COMPONENT DESIGNATION	DESCRIPTION	PARAMETERS	MANUFACTURER P/N	TiL P/N	MANUFACTURER	SUPPLIER	LOT No.
	1	1		PCB		989996		Crimp Circuits	125	
$	2	3	DISP1,2,3	Alpha Numeric Display	Green	HCMS2923		Hewlett Packard	195	
*			DISP1,2,3 Alt.	Alpha Numeric Display	Red	HCMS2922		Hewlett Packard	195	
$	3	2	D1,2	LED	Green	LLL-4231		Lenlite	155	
*			D1,2 Alt.	LED	Red	LLL-4221		Lenlite	155	
	4	1	J5	Header, Single Row	11 pin	68490-111		Dupont	150	
	5	1	J7	Header, Single Row	2 pin	68490-102		Dupont	150	
	6	2	GND	Header, Single Row	1 pin	68490-101		Dupont	150	

REVISIONS		
	DATE	APP'D.
N/C	MAR 2/99	

USED ON: VHF/FM DISPLAY BOARD

ASSY.No.: 983372-1,-2

DATE: MARCH 2, 1999

SHEET 1 **OF** 1

TiL technisonic industries ltd

PARTS LIST

NO. **PL-** 982506

CONTRACT TO THE CANADIAN OR UNITED STATES GOVERNMENT MAY NOT, IN WHOLE OR IN PART, BE DUPLICATED OR DISCLOSED OR USED FOR MANUFACTURE OF PART DISCLOSED HEREIN, WITHOUT THE PRIOR WRITTEN PERMISSION OF TECHNISONIC INDUSTRIES LIMITED.

LTR	DESCRIPTION	DATE	APPR
A	ADDED R7 AND J1 FOR USFS SPEC	NOV 19/98	

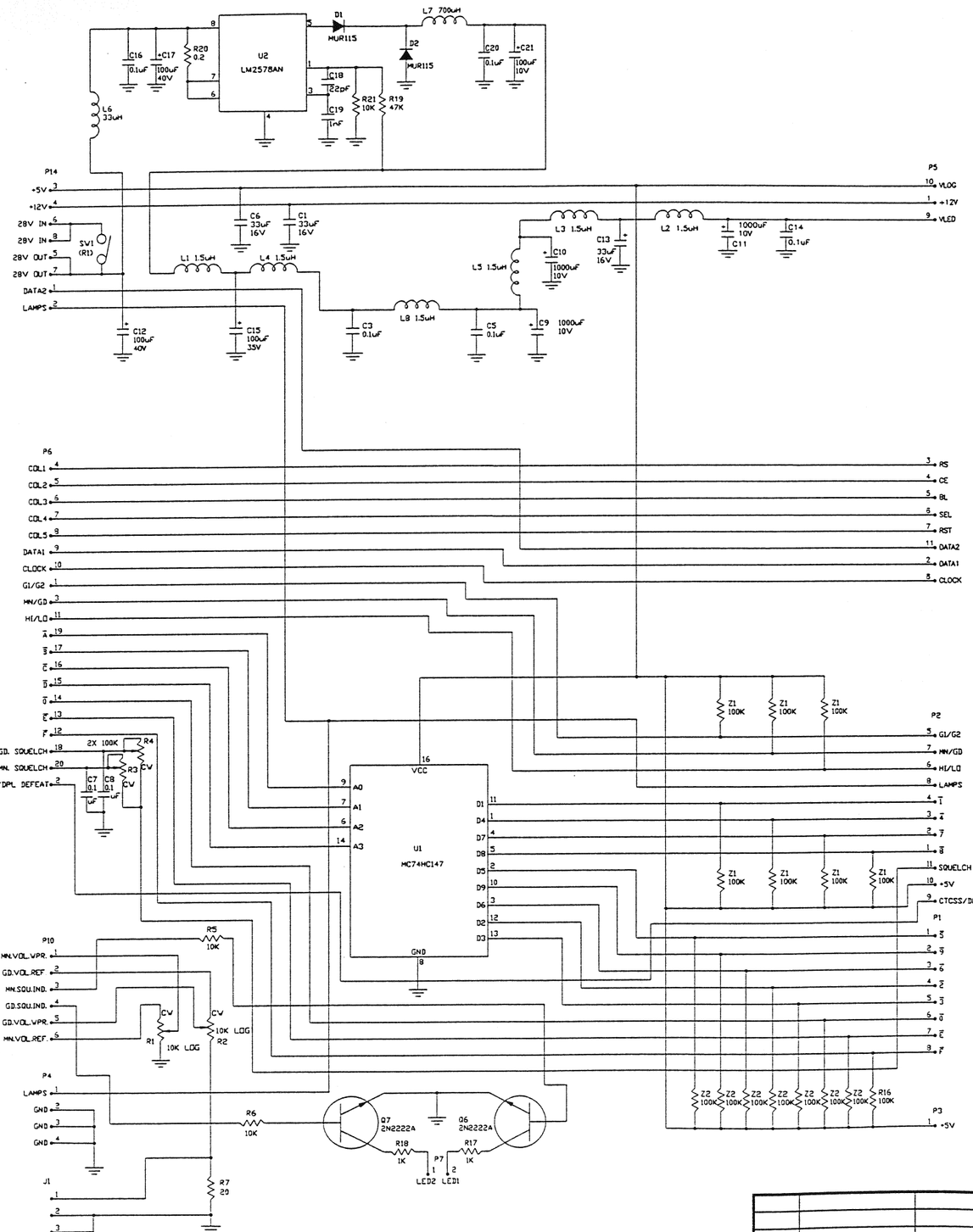

HIGHEST DESIGNATION NUMBERS USED							
Z2	D2	L8	C21	P14	Q7	R21	U2
SW1	J1						

DESIGNATIONS NOT USED							
P8	P9	P11	P12	P13	R8	R9	R10
R11	R12	R13	R14	R15	C2	C4	Q1
Q2	Q3	Q4	Q5				

REV A

		983373-1
REQ'D	NEXT ASSY	USED ON
APPLICATION		

NOTES: UNLESS OTHERWISE STATED.

CONTRACT NO.	Technisonic Industries	
SIGNATURES	DATES	FM INTERFACE BOARD SCHEMATIC DIAGRAM
DFT Steve McIntosh	NOV 10/98	
TECHNISONIC APP'D Steve McIntosh	SIZE:	CODE ID. NO.: 38546
	DWG. NO.: 985353	
	SCALE: NONE	SHEET 1 OF 1

DWG# 989997A

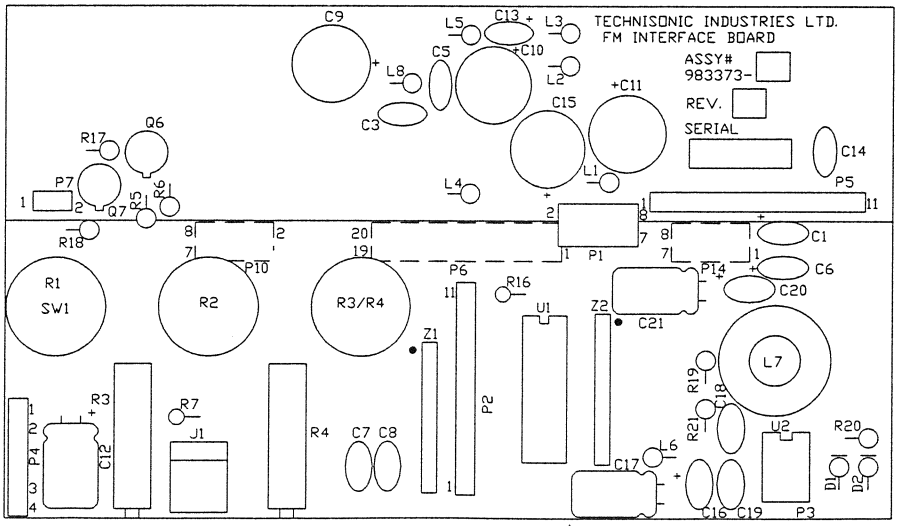

SILK SCREEN

LEGEND:

BATCH No.:

	No.	QTY	COMPONENT DESIGNATION	DESCRIPTION	PARAMETERS	MANUFACTURER P/N	TiL P/N	MANUFACTURER	SUPPLIER	LOT No.
	1	1		PCB		989997		Crimp Circuits	125	
	2	1	U1	10-4 Priority	16 pin dip	MC74HC147N		Motorola	155	
	3	1	U2	Chopper, Power Supply	8 pin	LM2578AN		National	155	
	4									
	5	2	Q6,7	Transistor	CAN	2N2222A		Any	155	
	6	2	for Q6,7	Insulator		121-032		Bivar	325	
	7									
	8	2	D1,2	Diode	DO-41	MUR115		Motorola	155	
	9	2	Z1-2	Resistor Network	100K/1W	4608X-101-104		Bourns	155	
	10									
	11	6	L1-5, 8	RF Choke	1.5μH	70F566A1		Miller	155	
	12	1	L6	Inductor	33μH/3%	1M-2-33		Dale	155	
	13	1	L7	Inductor	700μH	947101	947101	Frost	173	
	14									
	15	2	R3,4	Potentiometer	100K/3%	3006P-1-104		Bourns	155	

REVISIONS		
	DATE	APP'D
N/C	MAR 2/99	

USED ON: VHF/FM INTERFACE BOARD

ASSY.No.: 983373-1

DATE: MARCH 2, 1999

SHEET 1 **OF** 3

TiL technisonic industries ltd

PARTS LIST

NO. **PL-** 982507

	No.	QTY	COMPONENT DESIGNATION	DESCRIPTION	PARAMETERS	MANUFACTURER P/N	TiL P/N	MANUFACTURER	SUPPLIER	LOT No.
	16	2	R17,18	Resistor	1KΩ/1/4W/5%	CR25 1K		Philips	155	
	17	1	R7	Resistor	20Ω/1/4W/5%	CR25 20Ω		Philips	155	
	18									
	19	1	R16	Resistor	100K/1/4W/5%	CR25 100K		Philips	155	
	20	3	R5,6,21	Resistor	10K/1/4W/5%	CR25 10K		Philips	155	
	21	1	R19	Resistor	43K/1/4W/5%	CR25 43K		Philips	155	
	22	1	R20	Resistor	.2Ω/.4W/5%	RS-1/4 R2		Dale	155	
	23									
	24	2	C1,6	Cap., Tant. .1sp	33μF/16V	TAP33M16SP		ITT	440	
	25	7	C3,5,7,8,14,							
			16,20	Capacitor, Cer. Block	.1μF/50V	CK05BX104		Centralab	155	
	26	3	C9,10,11	Cap., Electrolytic	1000μF/10V	SME10VB102		United Chem Con	155	
	27	1	C13	Cap., Tant. .2sp	33μF/16V	TAP33M16		ITT	155	
	28	1	C15	Cap., Electrolytic	100μF/35V	035-90059		Philips	155	
	29	2	C12,17	Cap., Electrolytic	100μF/40V	035-57101		Philips	155	
	30	1	C18	Cap., Cer. Pl. .2sp	22pF/100V	681-10229		Philips	155	
	31	1	C19	Cap. Cer. Pl. .2sp	.001μF/100V	630-09102		Philips	155	
	32	1	C21	Cap., Electrolytic	100μF/10V	035-54101		Philips	155	
	33									

	No.	QTY	COMPONENT DESIGNATION	DESCRIPTION	PARAMETERS	MANUFACTURER P/N	TiL P/N	MANUFACTURER	SUPPLIER	LOT No.
	34	1		Bracket		938180	938180	TiL	377	
	35	1		Bracket		938179	938179	TiL	377	
	36	1	for U2	Heatsink		947111	947111	TiL	377	
	37									
	38	3		Screw, Pan Phil	S/S	4-40x5/16"		Advance Fastners	145	
	39	1		Jumper	Buss Wire	22 AWG		Any	5	
	40	3		Lockwasher	S/S	No.4		Dependable	145	
	41	3		Nut	S/S	4-40		Dependable	145	
	42									
	43	1	P6	Connector	20 pin	76314-110		Dupont	150	
	44	2	P10,14	Connector	8 pin	76314-104		Dupont	150	
	45	1	P2	Connector	11 pin	76308-111		Dupont	150	
	46	1		Wire, Black 22awg.	3/16 x 10 x 3/8"	TR64		Advance Wire	5	
	47	1		Solder Lug	No. 4	7325		Keystone	160	
	48	1	J1	Header, Single row	3 pin	69191-103		Berg Electronics	108	
	49	1	for J1	Jumper	2 pin	68786-102		Berg Electronics	108	
	50	27		Washer	Nylon	W901		Any	160, 120	
	51	A/R		Hot Melt Glue				Bostic	107	
	52	A/R	for U2	Epoxy		No. 155		Delta	155	

THIS DRAWING CONTAINS DESIGN AND OTHER INFORMATION WHICH ARE THE PROPERTY OF TECHNISONIC INDUSTRIES LIMITED. EXCEPT FOR RIGHTS EXPRESSLY GRANTED BY CONTRACT TO THE CANADIAN OR UNITED STATES GOVERNMENT MAY NOT, IN WHOLE OR IN PART, BE DUPLICATED OR DISCLOSED OR USED FOR MANUFACTURE OF PART DISCLOSED HEREIN, WITHOUT THE PRIOR WRITTEN PERMISSION OF TECHNISONIC INDUSTRIES LIMITED.

REVISIONS

LTR	DESCRIPTION	DATE	APPR
A	CHANGED NAME TO "SWITCH" BOARD	02/11/99	

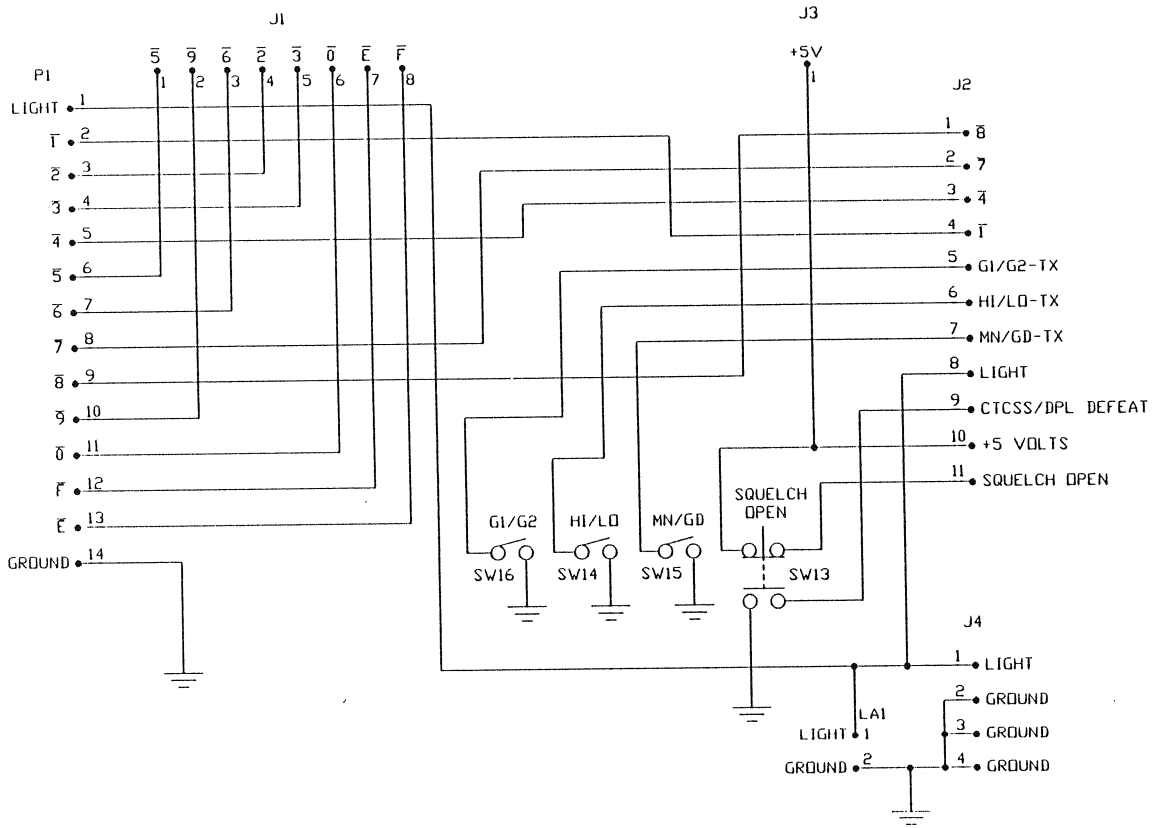

HIGHEST DESIGNATION NUMBERS USED						
J4	LA1	SW16	R3	LED9		

DESIGNATIONS NOT USED						
SW1-SW12						

REQ'D	NEXT ASSY	USED ON
		983374-1
APPLICATION		

CONTRACT NO.

SIGNATURES	DATE
DFT	JAN 12/99
TECHNISONIC APP'D	
DATE	FEB 15/99

Technisonic Industries

FM SWITCH BOARD
SCHEMATIC DIAGRAM

SIZE	CODE ID. NO.	DWG. NO.
	38546	985354
SCALE		SHEET OF

DWG# 989998A

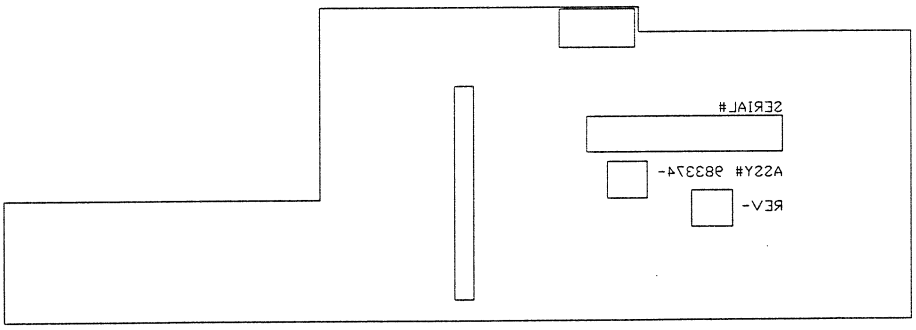

DWG# 989998A

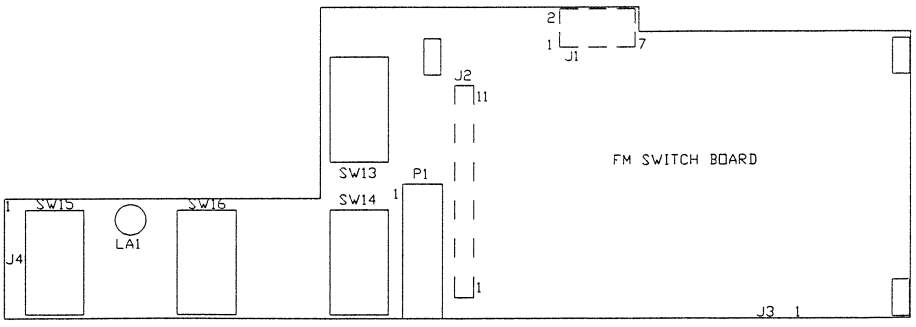

SILK SCREEN

LEGEND:

BATCH No.:

	No.	QTY	COMPONENT DESIGNATION	DESCRIPTION	PARAMETERS	MANUFACTURER P/N	TiL P/N	MANUFACTURER	SUPPLIER	LOT No.
	1	1		PCB		989998	989998	Crimp Circuits	125	
	2									
	3	1	SW13	Switch	Push button	8221SHCGE		C + K	155	
	4	3	SW14,15,16	Switch	SPDT	7101SPDCQE		C + K	155	
	5									
	6	1	LA1	Connector	2 pin	929850-01-02-10		3M	155	
			NOTE: Use only 3M type.							
	7									
	8	1	J1	Header, Double Row	8 pin	68601-108		Dupont	150	
	9	1	J2*	Header, Single Row	11 pin	68002-111		Dupont	150	
			*NOTE: SOLDER AND PULL OFF BACK PLASTIC							
	10	1	J3	Header, Single Row	1 pin	68415-101		Dupont	150	
	11	2	J4	Header, Single Row	2 pin	68415-102		Dupont	150	
	12									
	13	1		Front Plate	Metal	938178	938178	CNC	114	

REVISIONS		
	DATE	APP'D.
N/C	MAR 2/99	

USED ON: VHF/FM SWITCH BOARD

ASSY.No.: 983374-1

DATE: MARCH 2, 1999

SHEET 1 **OF** 1

TiL technisonic industries ltd

PARTS LIST

NO. **PL-** **982508**

DOCUMENTS ENCLOSED IN THIS SECTION

Factory Test and Alignment procedures for the TFM-138D

Document Description	*Document No.*	*No. Pages*
Final Acceptance Test Procedure for TFM-138D	986207	5 +cover
Note: CMT automated test Program 38 is equivalent to Performance Test and Test Data Sheet No. 956098 found in SECTION 6 of the Main Manual.		
Acceptance Test Data Sheet for TFM-138D	986208	2 + cover
Final Alignment Procedures for TFM-138D	986205	5 + cover
Alignment Data Sheet for TFM-138D	986206	1 + cover
Test Procedure for Main Rx/DF Module	986209	13 + cover

This document contains designs and other information which are the property of Technisonic Industries Ltd. This document may not in whole or the parts, be duplicated or disclosed or used for manufacture of the part disclosed herein, without the prior permission of Technisonic Industries Ltd.

TEST PROCEDURE
FOR
VHF/FM MAIN RX/DF MODULE
P/N 983355-1

DOCUMENT No.	986209
REVISION	N/C
DATE OF ISSUE	JUNE 4, 1998

SIGNATURE 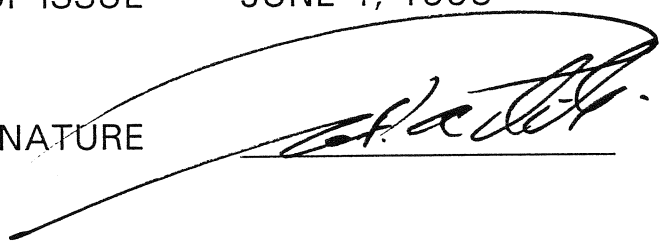

Technisonic Industries Limited

250 Watline Avenue, Mississauga, Ontario L4Z 1P4
Tel:(905)890-2113 Fax:(905)890-5338

TEST PROCEDURES FOR VHF/FM MAIN Rx/DF MODULE P/N 983355-1

1.0 *TEST EQUIPMENT*

1.1 VHF/FM Test Panel/Power Supply, P/N 94T021/1

1.2 VHF/FM Test Fixture, TFM-138, P/N 95T035.

1.3 Spectrum Analyser Advantest, R3361A or equivalent.

1.4 Digital Multimeter, Fluke 73 or equivalent.

1.5 RF Test Cables; Z = 50Ω, Z = 1KΩ and Z = 10KΩ.

1.6 RF Pick-Up Loop.

NOTE:
Ensure that L15 has tuning slug removed, L13 and L10 have aluminum tuning slug and L12, L14, L9 and L8 have ferrite tuning slug.

2.0 *INSTALLATION OF Rx VCO*

2.1 Inspect the cavities into which the VCO's shall be installed. Verify that internal components, solder joints and components leads are correct and good workmanship.

2.2 Install VCO.

3.0 *FM IF ALIGNMENT*

3.1 Place the UUT into the Test Fixture.

3.1.1 Connect the Tracking Generator Output via 50Ω coaxial cable to TP2 (observe polarity) and connect TP3 (observe polarity) via 10KΩ coaxial cable to the Spectrum Analyser Input.

3.2 **25KHz bandwidth alignment.**

3.2.1 Set the Spectrum Analyser as shown in Fig. 1, set main marker to 10.6920KHz and turn ON the Tracking Generator.

3.2.2 Turn ON power to the Test Set-up.

3.2.3 By tuning L4, L18 and C5 obtain a UUT response similar to Fig. 1. Tune for flat top (maximum ripple 1.5dB), mainly with C5 and L18 and for maximum gain, mainly with L4.

3.2.4 Change Spectrum Analyser settings as shown in Fig. 2, set main marker to 10.70000MHz.

3.2.5 Verify that the UUT response is similar to Fig. 2 and that Δ marker is at least |35dB| and that the left side of the response curve is also at least 35dB below the top. if not a "trade-off" alignment of L18 and C5 has to be performed. In this situation paragraph 3.2.1 through 3.2.5 must be repeated as many times as required to meet Fig. 1 and Fig.2.

3.3 **12.5KHz Alignment**

3.3.1 Set the Spectrum Analyser as shown in Fig. 3, set the main marker to 10.69625MHz and turn ON the Tracking Generator.

3.3.2 Turn ON power to the Test Set-up.

3.3.3 By tuning L4, L18 and C5 obtain a UUT response similar to Fig. 3. Tune for flat top (maximum ripple 1.0dB), mainly with C5 and L18 and for maximum gain -1dB down mainly with L4.

3.3.4 Change Spectrum Analyser settings as shown in Fig. 4, set main marker to 10.70000MHz.

3.3.5 Verify that the UUT response is similar to Fig. 4 and that Δ marker is at least |40dB| and that the left side of the response curve is also at least 40dB below the top. If not a "trade-off" alignment of L18 and C5 has to be performed. In this situation paragraph 3.3.1 through paragraph 3.3.5 must be repeated as many times as required to meet Fig. 3 and Fig. 4.

3.4.0 **DF IF Alignment**

3.4.1 Connect the Tracking Generator Output via 50Ω coaxial cable to TP2 (observe polarity) and connect TP5 (observe polarity) via 10KΩ coaxial cable to the Spectrum Analyser Input.

3.4.2 Set the Spectrum Analyser as shown in Fig. 1, set main marker to 10.6920KHz and turn ON the Tracking Generator.

3.4.3 By tuning L20 and C60 obtain a UUT response similar to Fig. 1. Tune for flat top (maximum ripple 1.5dB), mainly with C60 and L20 and for maximum gain, mainly with L4.

3.4.4 Change Spectrum Analyser settings as shown in Fig. 2, set main marker to 10.70000MHz.

3.4.5 Verify that the UUT response is similar to Fig. 2 and that Δ marker is at least |35dB| and that the left side of the response curve is also at least 35dB below the top. if not a "trade-off" alignment of L20 and C60 has to be performed. In this situation paragraph 3.4.2 through 3.4.5 must be repeated as many times as required to meet Fig. 1 and Fig.2.

4.0 *Rx X-Tal REFERENCE OSCILLATOR OPERATION VERIFICATION*

4.1 Set Spectrum Analyser as shown in Fig.5. Place a pick-up loop close to the Rx reference X-Tal.

4.2 Adjust the response "spike" with C50 and 16.0000MHz. If not possible, capacitors C49 and/or C51 may be changed to meet this requirement (C49 0pF to 27pF, C51 20pF to 39pF).

5.0 *Rx FRONT END ALIGNMENT*

5.1 Set Spectrum Analyser as shown in Fig. 6. Connect the Output of the Tracking Generator, using 50Ω coaxial cable, to J1 pin 1 and 2 (pin 1 signal) and the Spectrum Analyser input, using 1KΩ coaxial cable, to TP1. Ensure that the test set-up power is

ON and turn ON the tracking generator, Tune UUT to 156.0000MHz. Verify that the tuning voltage (TP4) is between +4.15Vdc and +4.37Vdc.

5.2 Adjust inductors L10, L12, L13, and L9 to obtain the top part of the response curve similar to Fig. 6. Adjust L14, L8, C25 and C12 to obtain the right hand side of the response curve as shown in Fig. 6. Verify that the response curve can move left/right in respect to the Δ marker.

5.3 Set Spectrum Analyser as shown in Fig. 7. Fine tune with L12, L13, L10 and L9 to obtain the response curve as shown in Fig. 7. The purpose of this fine tuning is to obtain maximum amplitude of the curve (marker in the centre of the curve to be as high as possible, while maintaining the response shape as shown in Fig. 7).

5.4 Set Spectrum Analyser as shown in fig. 8. Tune UUT to 174.0000MHz and verify that tuning voltage (TP4) is between +8.60Vdc and +8.80Vdc. Verify that the response curve is similar to that shown in Fig. 8.

5.5 Set Spectrum Analyser as shown in Fig. 9. Tune UUT to 138.0000MHz and verify that tuning voltage is between +1.75Vdc and +1.97Vdc. Verify that the response curve is similar to that shown in Fig. 9.

5.6 **If the response curve of Fig. 8 and/or Fig. 9 are not required, "TRADE-OFF" alignment, as outlined in paragraphs 5.2 through paragraph 5.5, must be performed.**

6.0 *Rx VCO ALIGNMENT*

6.1 Set UUT to 138.0000MHz. Set Spectrum Analyser as shown in Fig. 10. Place an RF Pick-Up Loop close to the VCO RF output track, leading to the mixer and connect the Loop coaxial cable to the spectrum analyser input. With capacitor C50 set the centre frequency of the response curve to 148.7000MHz ∓ 100Hz.

7.0 *Rx SECOND LOCAL OSCILLATOR TEST*

7.1 Set Spectrum Analyser as shown in Fig.11. Place the Pick-up Loop around X-Tal Y1. With capacitor C8 set the centre frequency of the response curve to 10.24500MHz ∓ 10Hz.

8.0 *TEST AFTER INSTALLATION COVERS TOP AND BOTTOM.*

8.1 IF Alignment - Repeat steps in paragraph 3.0 up to 3.4.5 as applicable.

8.2 Rx Front End - Repeat steps in paragraph 5.0 up to 5.6.

8.3 Rx VCO - Repeat steps in paragraph 6.0 up to 6.1.

8.4 Rx Sec. Loc. Osc. - Repeat steps in paragraph 7.0 up to 7.1.

9.0 *TURN UUT POWER OFF, END OF TEST.*

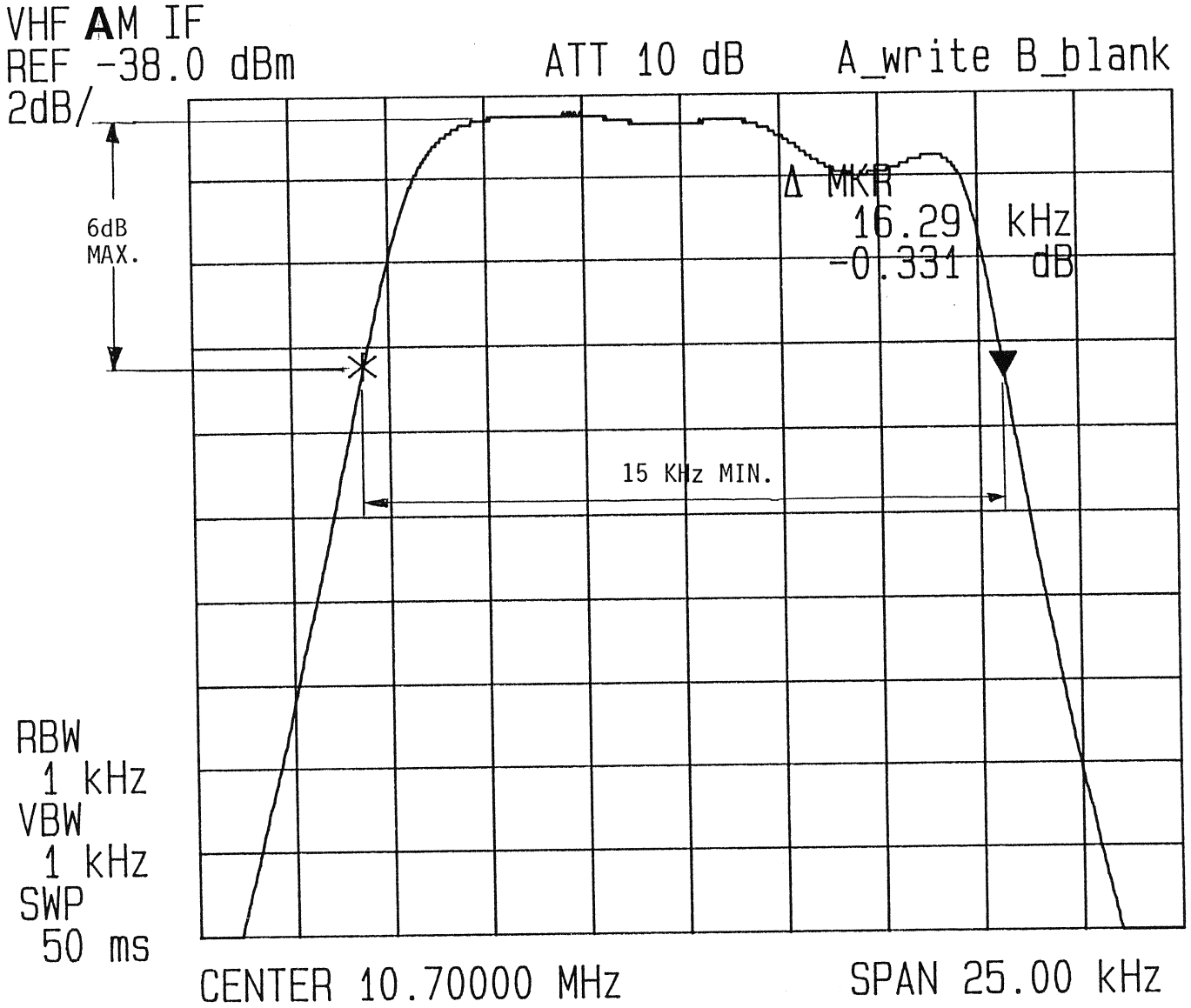
VHF AM IF
REF -38.0 dBm
2dB/
ATT 10 dB
A_write B_blank
6dB
MAX.
Δ MKR
16.29 kHz
-0.331 dB
15 KHz MIN.
RBW
1 kHz
VBW
1 kHz
SWP
50 ms
CENTER 10.70000 MHz
SPAN 25.00 kHz

FIGURE 1

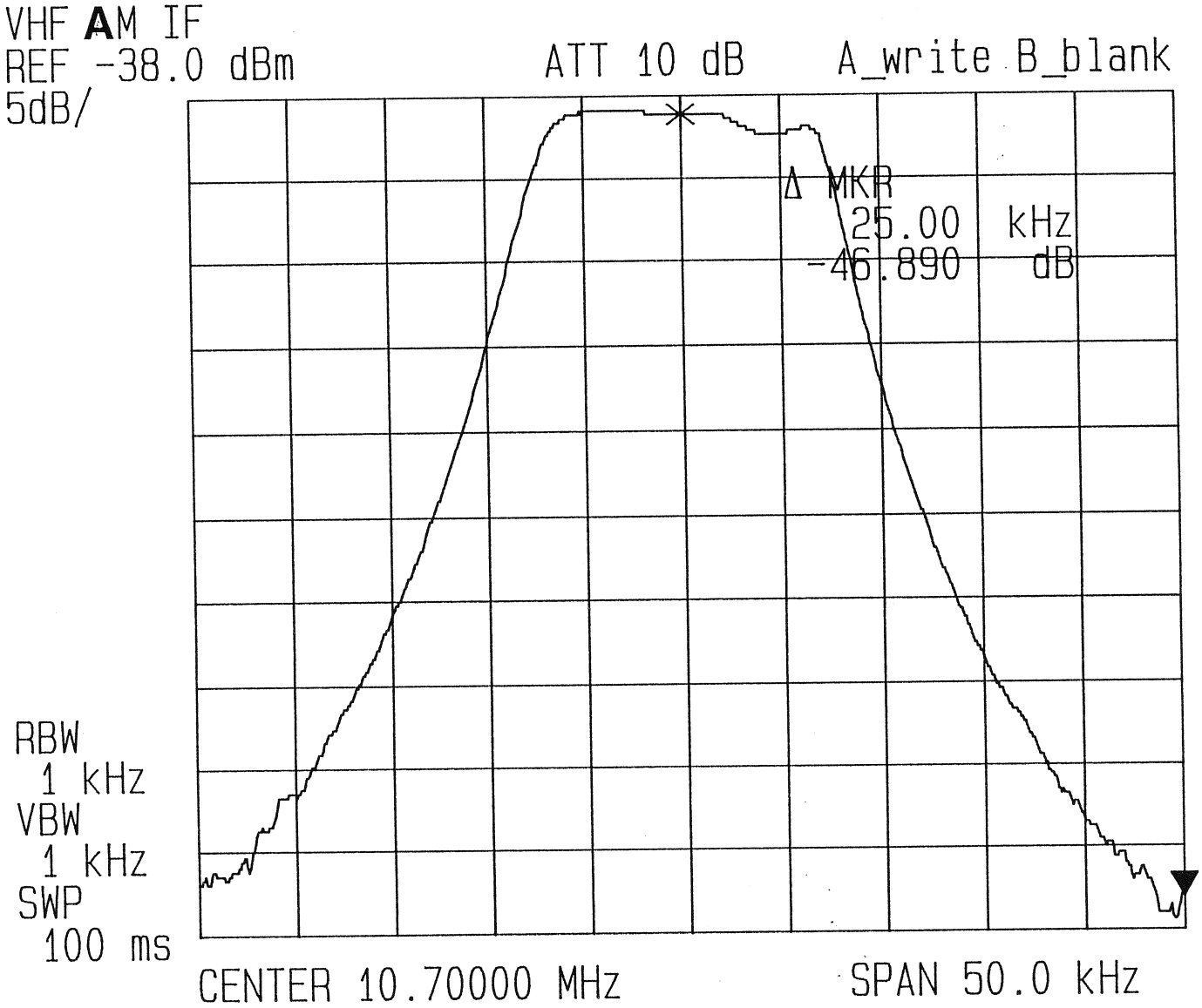
VHF AM IF
REF -38.0 dBm
5dB/
ATT 10 dB
A_write B_blank
Δ MKR
25.00 kHz
-46.890 dB
RBW
1 kHz
VBW
1 kHz
SWP
100 ms
CENTER 10.70000 MHz
SPAN 50.0 kHz

FIGURE 2

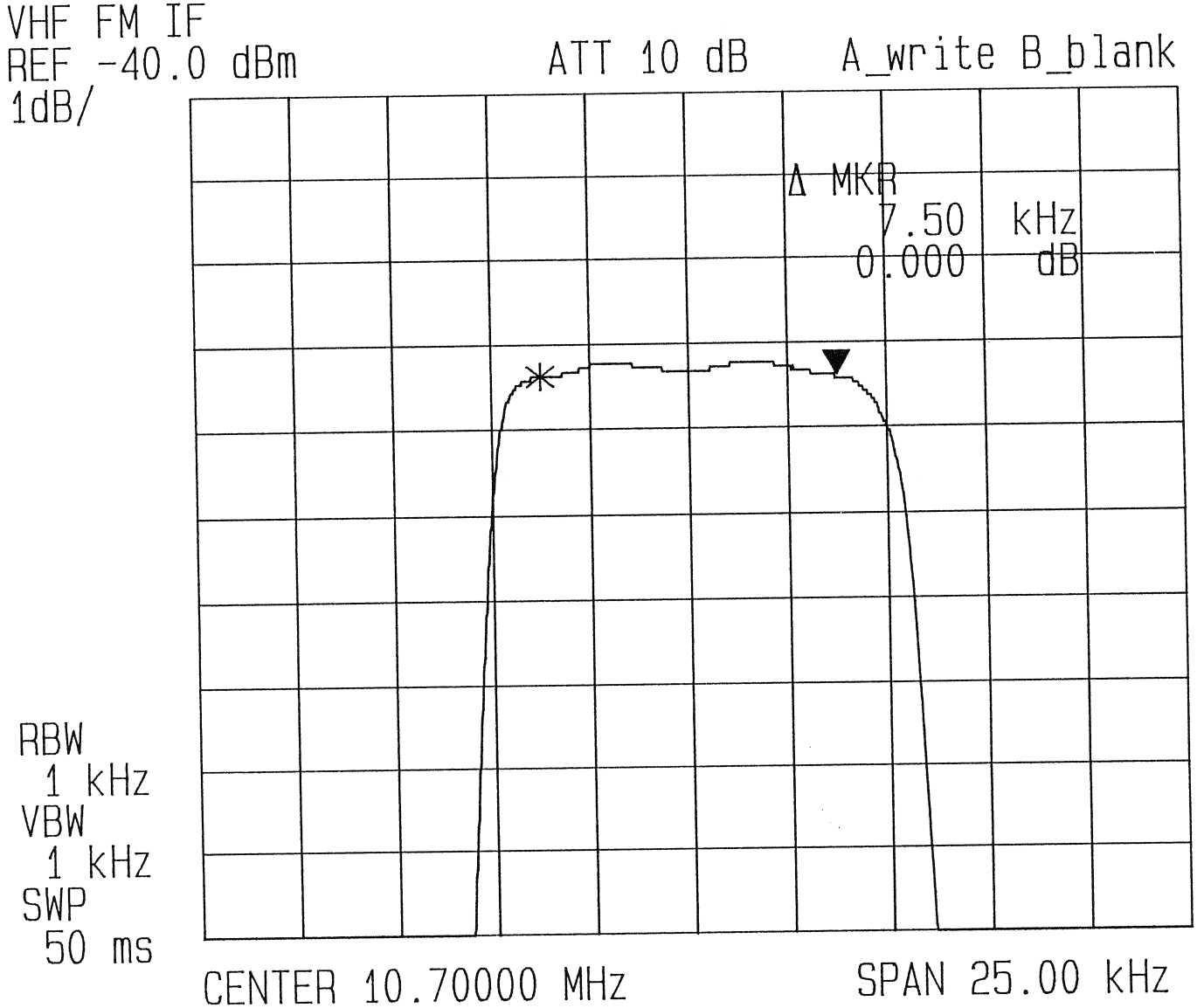
VHF FM IF
REF -40.0 dBm
1dB/
ATT 10 dB
A_write B_blank
Δ MKR
7.50 kHz
0.000 dB
RBW
1 kHz
VBW
1 kHz
SWP
50 ms
CENTER 10.70000 MHz
SPAN 25.00 kHz

FIGURE 3

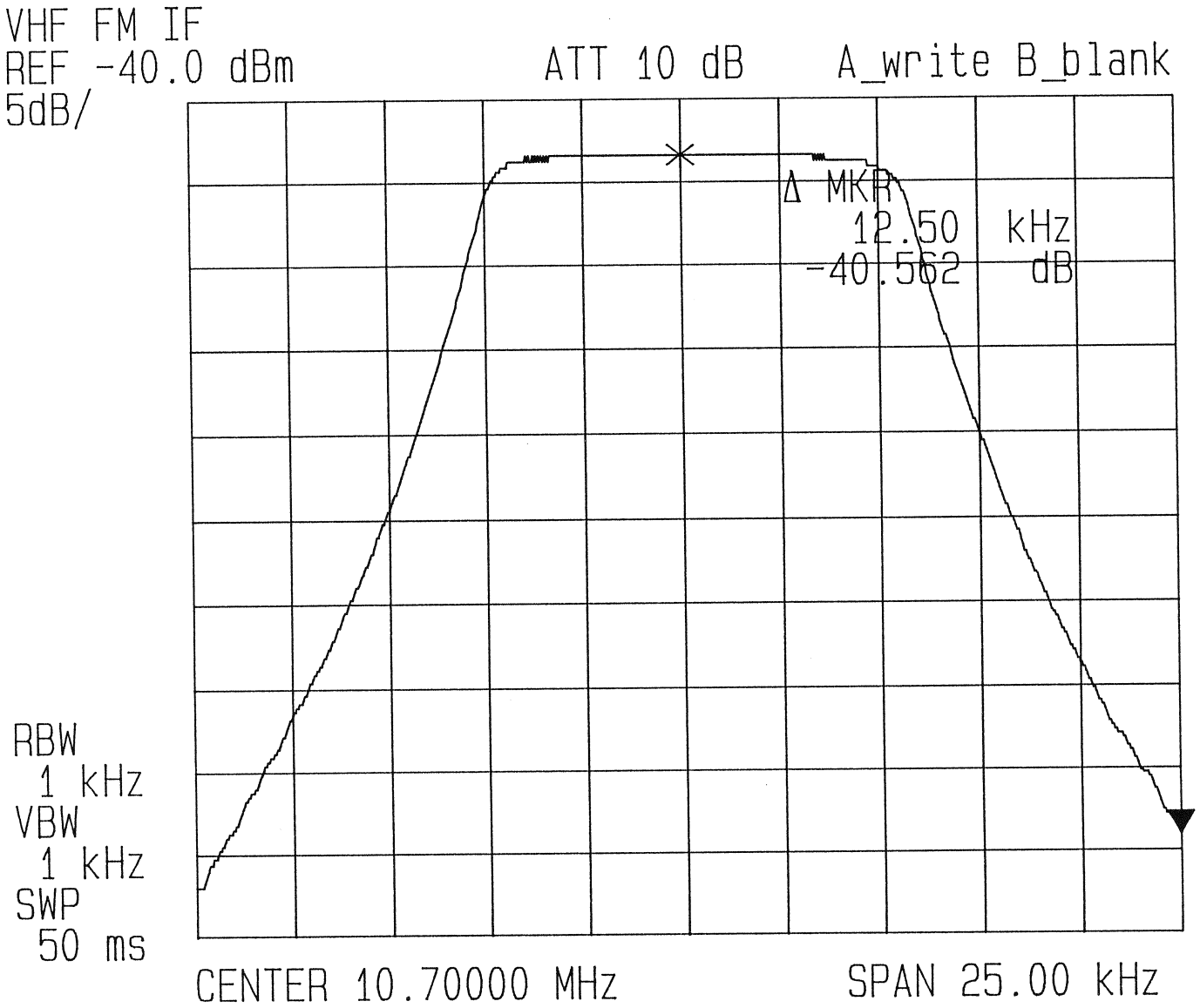
VHF FM IF
REF -40.0 dBm
5dB/
ATT 10 dB
A_write B_blank
Δ MKR
12.50 kHz
-40.562 dB
RBW
1 kHz
VBW
1 kHz
SWP
50 ms
CENTER 10.70000 MHz
SPAN 25.00 kHz

FIGURE 4

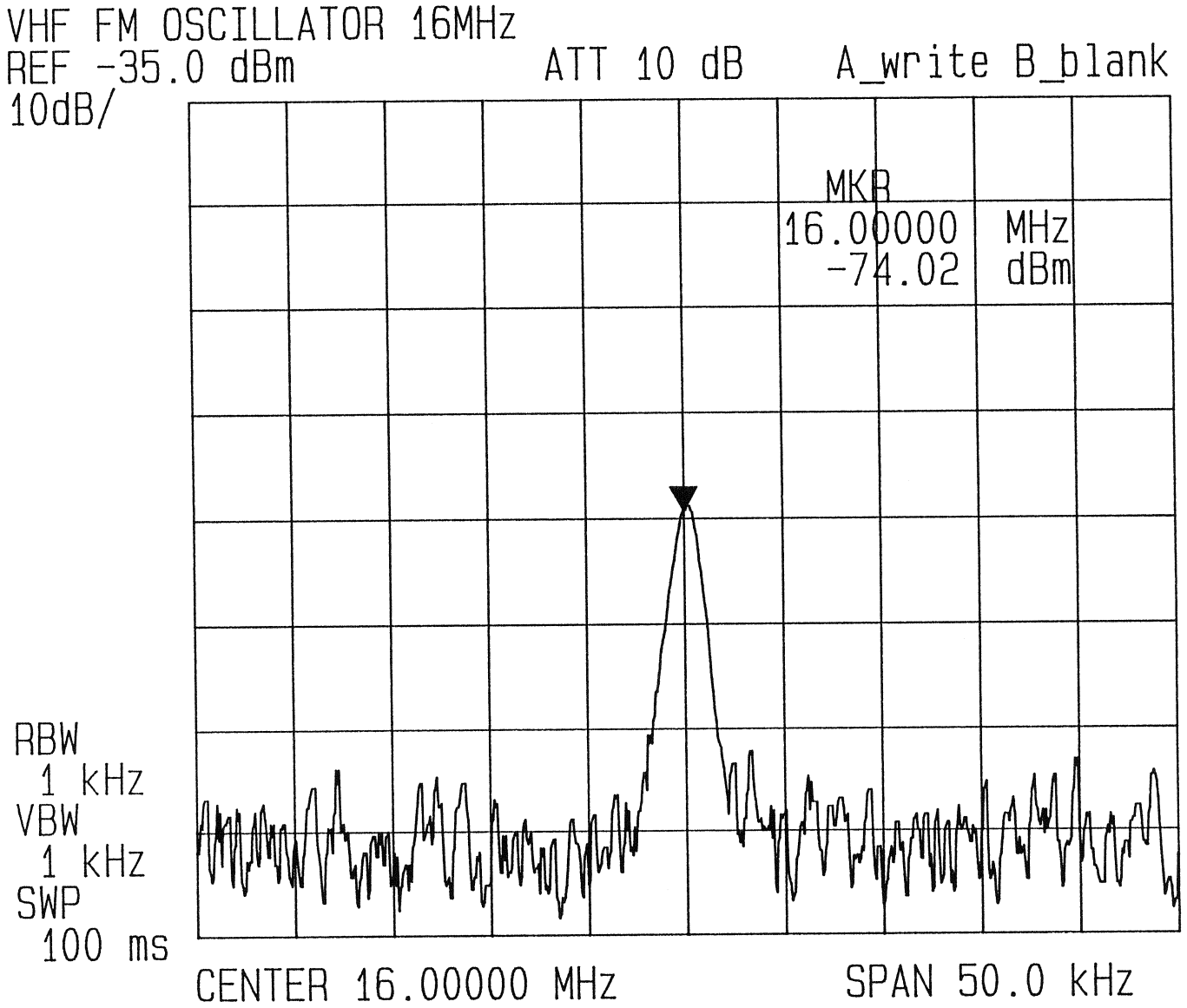
VHF FM OSCILLATOR 16MHz
REF -35.0 dBm
ATT 10 dB
A_write B_blank
10dB/
MKR
16.00000 MHz
-74.02 dBm
RBW
1 kHz
VBW
1 kHz
SWP
100 ms
CENTER 16.00000 MHz
SPAN 50.0 kHz

FIGURE 5

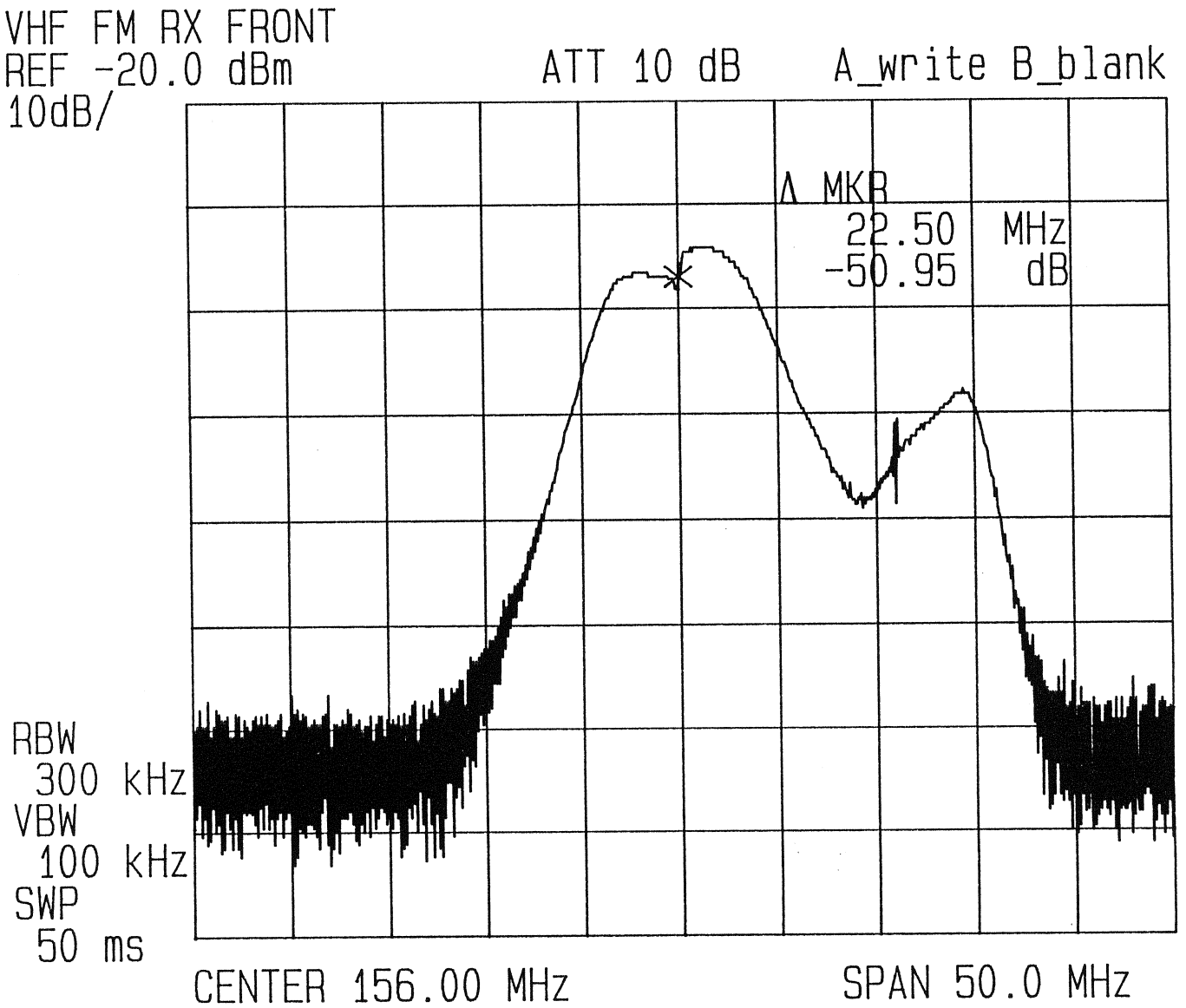
VHF FM RX FRONT
REF -20.0 dBm
10dB/
ATT 10 dB
A_write B_blank
Δ MKR
22.50 MHz
-50.95 dB
RBW
300 kHz
VBW
100 kHz
SWP
50 ms
CENTER 156.00 MHz
SPAN 50.0 MHz

FIGURE 6

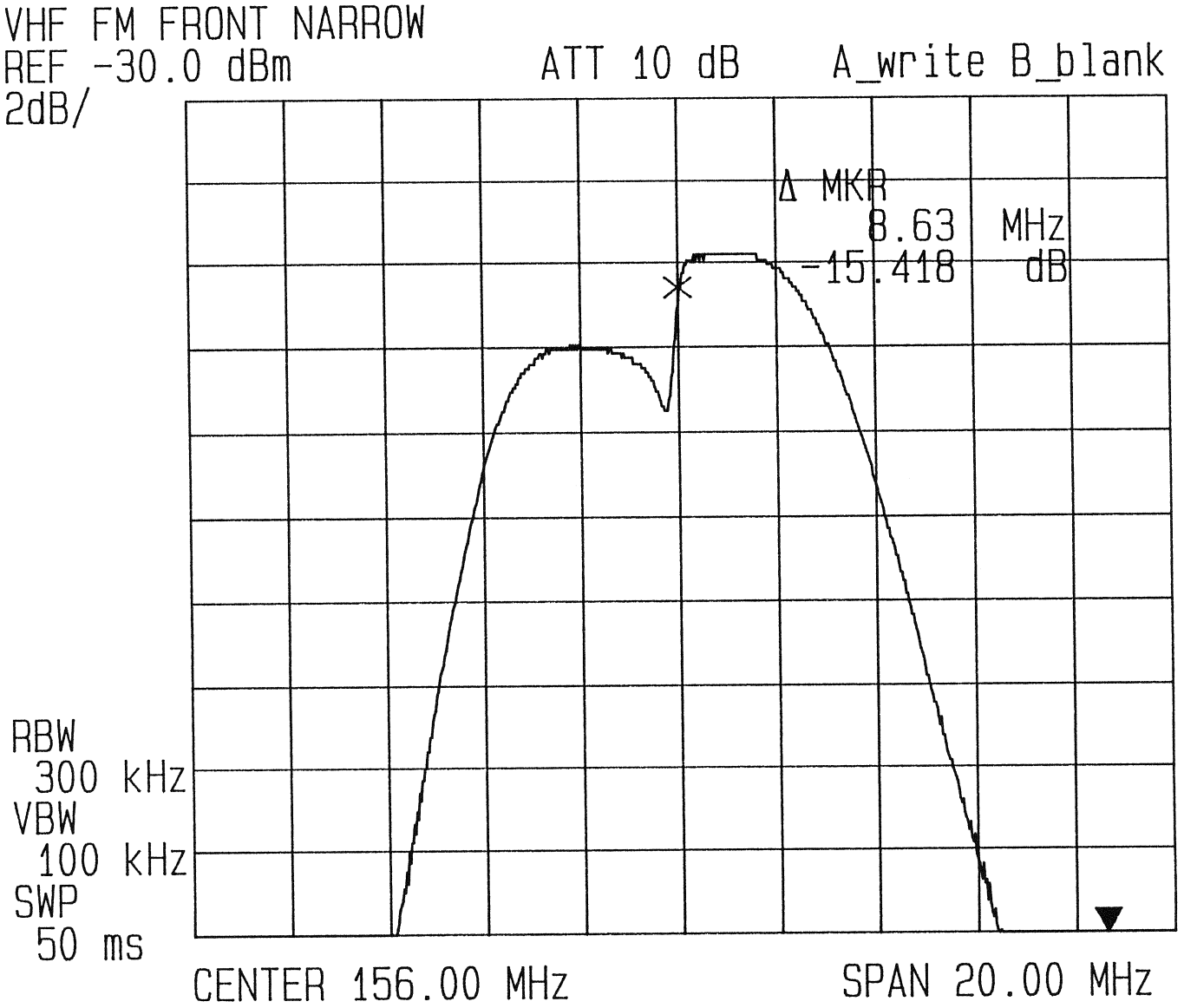
VHF FM FRONT NARROW
REF -30.0 dBm
ATT 10 dB
A_write B_blank
2dB/
Δ MKR
8.63 MHz
-15.418 dB
RBW
300 kHz
VBW
100 kHz
SWP
50 ms
CENTER 156.00 MHz
SPAN 20.00 MHz

FIGURE 7

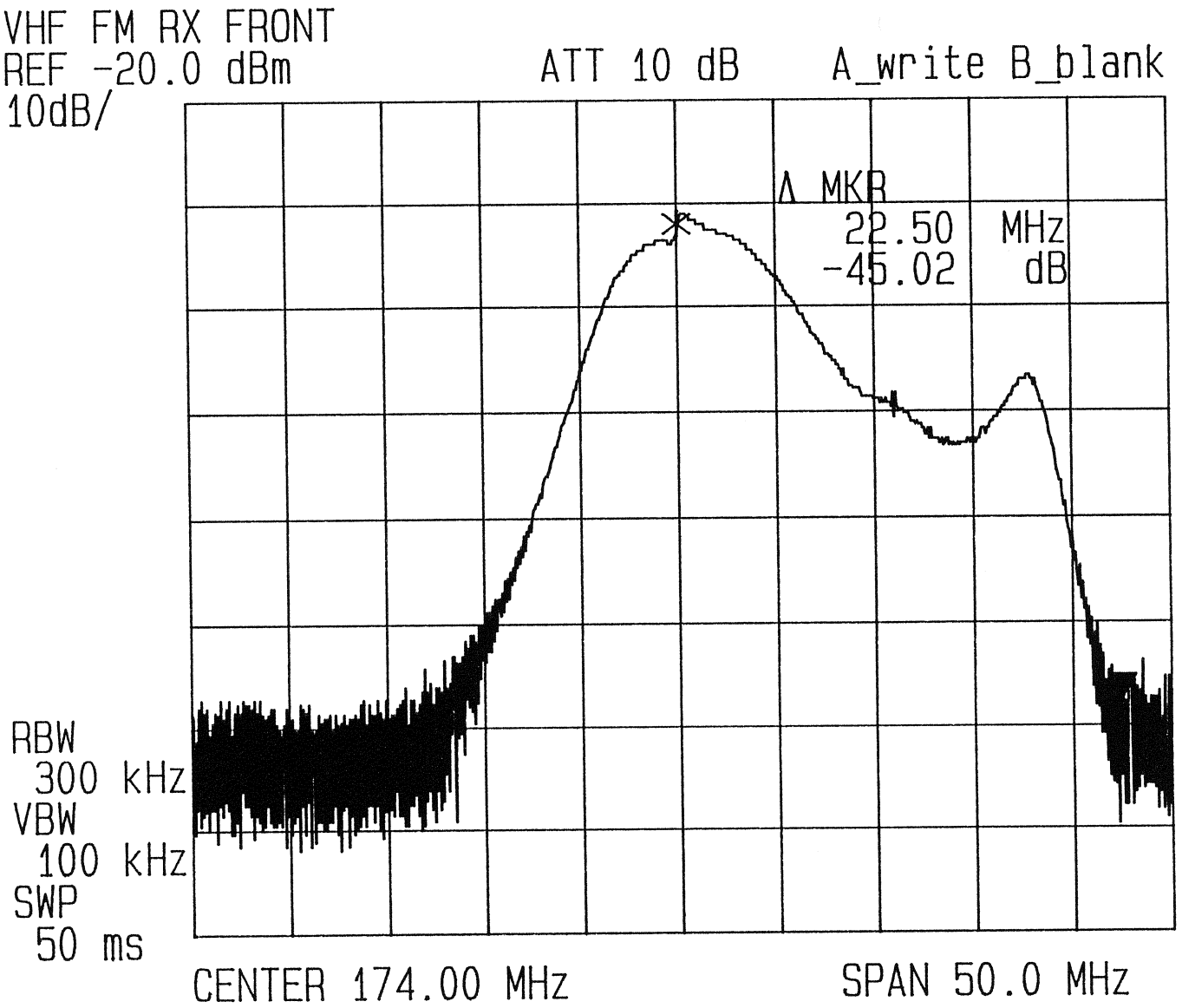
VHF FM RX FRONT
REF -20.0 dBm
10dB/
ATT 10 dB
A_write B_blank
Δ MKR
22.50 MHz
-45.02 dB
RBW
300 kHz
VBW
100 kHz
SWP
50 ms
CENTER 174.00 MHz
SPAN 50.0 MHz

FIGURE 8

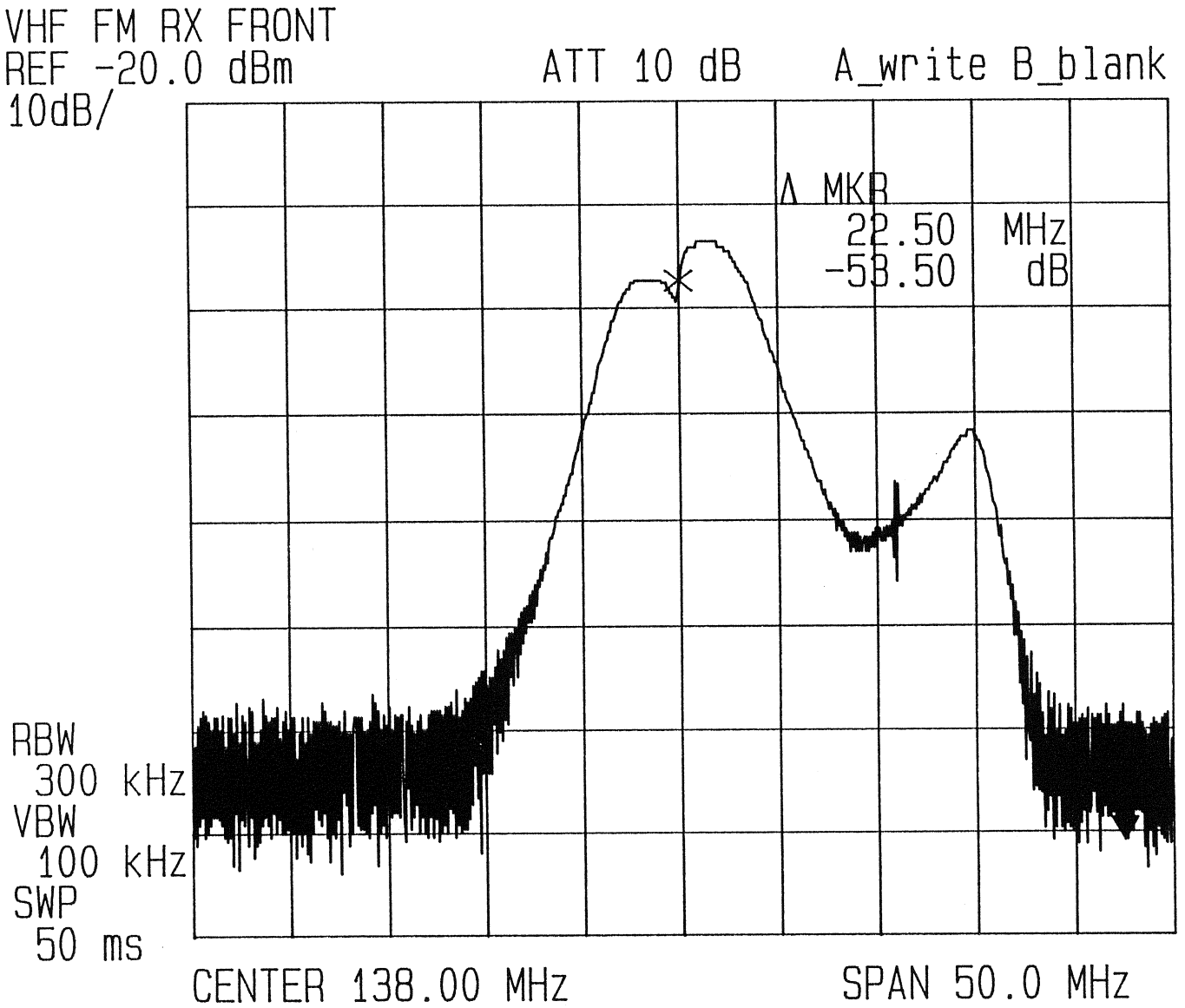
VHF FM RX FRONT
REF -20.0 dBm
10dB/
ATT 10 dB
A_write B_blank
Δ MKR
22.50 MHz
-53.50 dB
RBW
300 kHz
VBW
100 kHz
SWP
50 ms
CENTER 138.00 MHz
SPAN 50.0 MHz

FIGURE 9

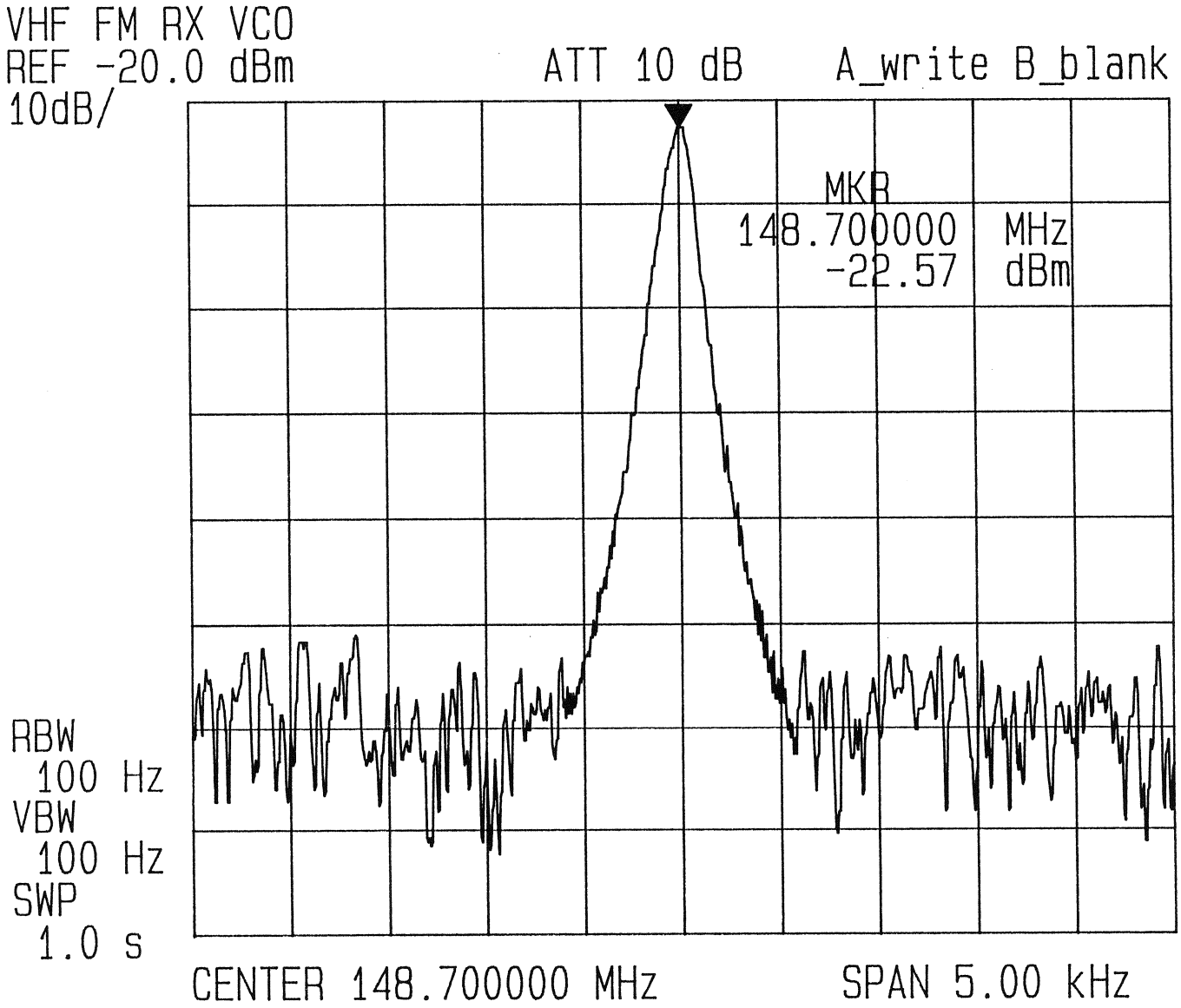
VHF FM RX VCO
REF -20.0 dBm
10dB/
ATT 10 dB
A_write B_blank
MKR
148.700000 MHz
-22.57 dBm
RBW
100 Hz
VBW
100 Hz
SWP
1.0 s
CENTER 148.700000 MHz
SPAN 5.00 kHz

FIGURE 10

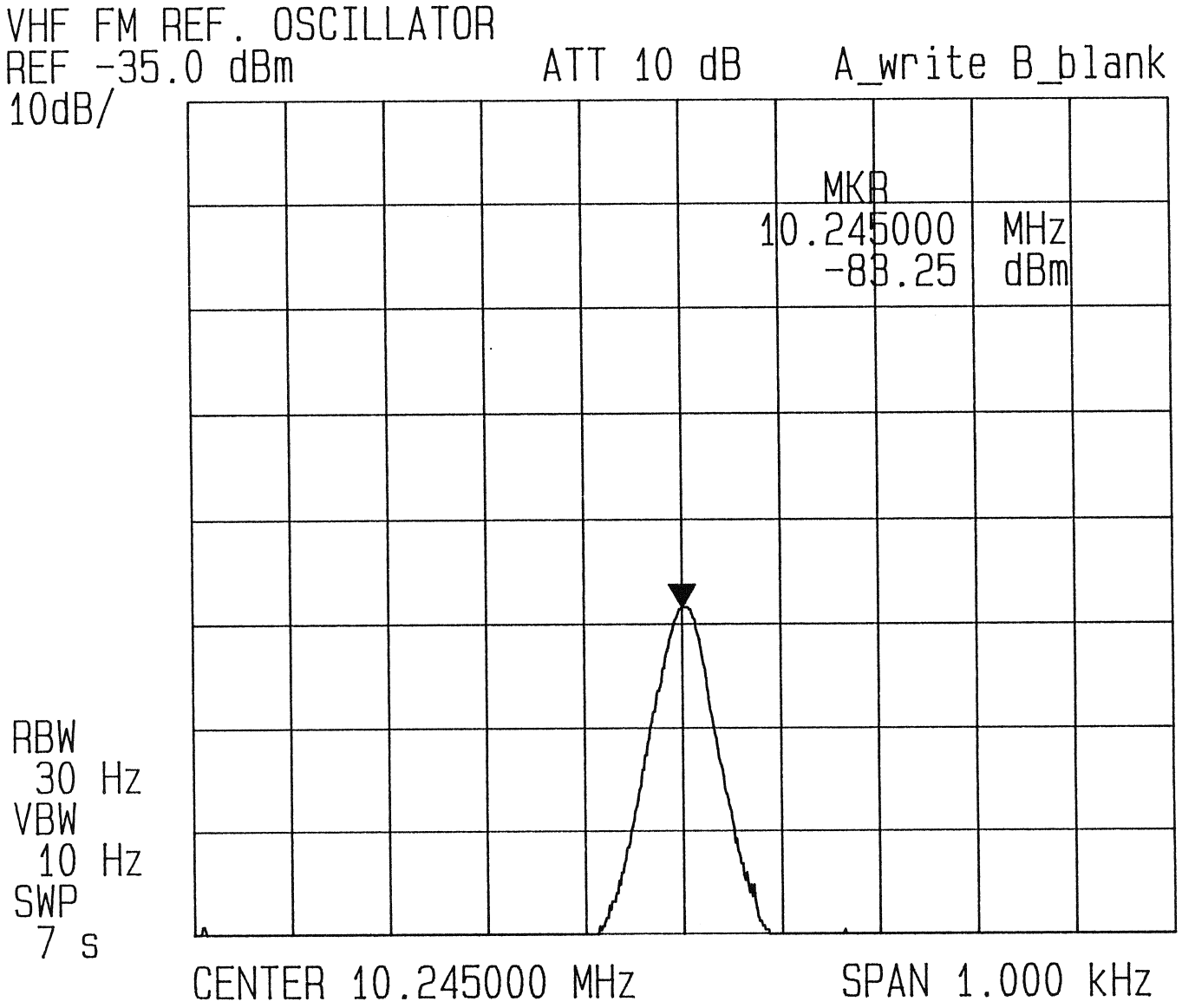
VHF FM REF. OSCILLATOR
REF -35.0 dBm
ATT 10 dB
A_write B_blank
10dB/
MKR
10.245000 MHz
-83.25 dBm
RBW
30 Hz
VBW
10 Hz
SWP
7 s
CENTER 10.245000 MHz
SPAN 1.000 kHz

FIGURE 11

This document contains designs and other information which are the property of Technisonic Industries Ltd. This document may not in whole or the parts, be duplicated or disclosed or used for manufacture of the part disclosed herein, without the prior permission of Technisonic Industries Ltd.

FINAL ACCEPTANCE TEST PROCEDURE FOR

TFM-138D TRANSCEIVER

DOCUMENT No.	986207
REVISION	N/C
DATE OF ISSUE	JUNE 5 1998

SIGNATURE 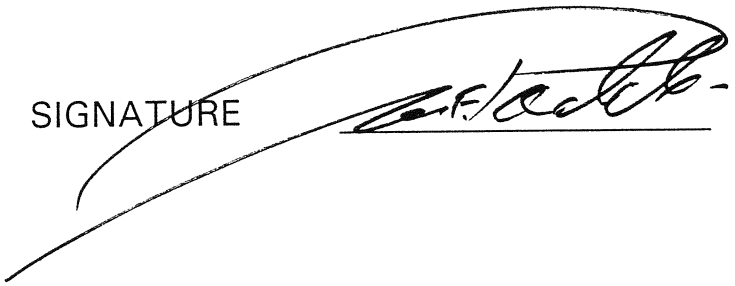

Technisonic Industries Limited

250 Watline Avenue, Mississauga, Ontario L4Z 1P4
Tel: (905)890-2113 Fax: (905)890-5338

FINAL ACCEPTANCE TEST PROCEDURES FOR TFM-138 SERIES TRANSCEIVERS

1.0.1 ***ALL TRANSCEIVERS MUST BE TESTED IN ACCORDANCE WITH CMT TEST PROGRAM 38 (to initiate enter "138 START").***

1.0.2 **TRANSCEIVER TFM-138B and TFM-138C MUST BE, IN ADDITION, TESTED IN ACCORDANCE WITH CMT TEST PROGRAM 39 (to initiate enter "139 START").**

1.1.0 ***ALL TRANSCEIVERS (TRANSMIT MODE) MUST BE TESTED FOR HARMONIC ATTENUATION AS FOLLOWS:***

1.1.1 Connect the Unit Under Test (UUT) to the TFM Test Panel.

1.1.2 Set modulation generator to 1kHz audio frequency and audio output level to -10dBm.

1.1.3 Connect the UUT RF output **THROUGH a 30 dB POWER ATTENUATOR to a Spectrum Analyser.**

1.1.4 Set the Spectrum Analyser as follows:
Centre Frequency: 550MHz
Amplitude Reference: 10dBm
Vertical Scale: 10dB/Div.
Horizontal Scale: 100MHz/Div.
Input Attenuator: 40dB.

1.1.5 Set UUT Tx frequency to 156.0000MHz.

1.1.6 Set PTT ON.

1.1.7 Make one complete spectrum sweep and store it. Set PTT OFF.

1.1.8 Position the Main Marker on the "fundamental response spike" and the Delta Marker on the highest secondary response spike.

1.1.9 The marker difference, in dB, must be at least 65dB.

1.1.10 Make a print/plot of the spectrum analyser screen. Write the UUT serial number on the print/plot.

1.2.0 ALL TRANSCEIVERS (RECEIVE MODE) MUST BE TESTED FOR MAIN Rx and GUARD Rx LOCAL OSCILLATOR ACCURACY AS FOLLOWS:

1.2.1 Connect the UUT to the TFM Test Panel.

1.2.2 Connect the UUT RF output **THROUGH a 30 dB POWER ATTENUATOR to a Spectrum Analyser.**

1.2.3 Set the Spectrum Analyser as follows:

Centre Frequency: 166.7000MHz
Amplitude Reference: -40dBm
Vertical Scale: 10dB/Div.
Horizontal Scale: 1.0kHz/Div.
Input Attenuator: 0dB.

1.3.0 MAIN Rx LOCAL OSCILLATOR

1.3.1 Set Main Rx to 156.0000MHz and Guard Rx to 155.0000MHz.

1.3.2 Make one complete spectrum sweep and store it.

1.3.3 Position the Main Marker on the peak of the response spike.

1.3.4 The Marker frequency shall be between 166.69990MHZ and 166.70010MHz, (±100Hz).

1.3.5 Make a print/plot of the spectrum analyser screen. Write the UUT serial number on the print/plot.

1.4.0 GUARD Rx LOCAL OSCILLATOR

1.4.1 Set Guard Rx to 156.0000MHz and Main Rx to 155.0000MHz.

1.4.2 Make one complete spectrum sweep and store it.

1.4.3 Position the Main Marker on the peak of the response spike.

1.4.4 The Marker frequency shall be between 166.69990MHz and 166.70010MHz, (±100Hz).

1.4.5 Make a print/plot of the spectrum analyser screen. Write the UUT serial number on the print/plot.

1.5.0 ALL TRANSCEIVERS (RECEIVE MODE) MUST BE TESTED FOR THIRD ORDER OF INTERMODULATION AS FOLLOWS:

1.5.1 Connect generator #1, generator #2 and generator #3 together, using three-way combiner.

1.5.2 Set generator #1 (CMT) to 156.0000MHz, 1kHz audio, 3kHz FM deviation, RF output to -110dBm.
Set generator #2 to 156.0250MHz, 400Hz audio, 3kHz FM deviation, **RF output OFF.**
Set generator #3 to 156.0500MHz, no modulation (RF signal ONLY), **RF output OFF.**

1.5.3 Turn ON DC power, select Headset (Phone) and turn ON UUT.

1.6.0 **MAIN RECEIVER.**

1.6.1 Set main receiver Rx frequency to 156.0000MHz. Set guard receiver Rx frequency to 155.000MHz and GRD volume control to minimum (CCW).

1.6.2 Press and hold Squelch button. Set MAIN volume to approx. 10V. Adjust RF output of generator #1 to obtain 12dB SINAD.

1.6.3 Set RF output of generators #2 and #3 **ON** and adjust to obtain RF output equal to: **RF output of generator #1 plus 70dB.**

1.6.4 Press and hold Squelch button and note the indicated SINAD. The SINAD must be 6dB minimum.

1.6.5 The intermodulation is equal to:
70dB + (SINAD of para 1.6.4 minus 6dB)/2

Example: Sinad of para 1.6.4 = 8dB,..... (8dB - 6dB)/2 = 1dB
The resulting intermodulation is 70dB + 1dB = 71dB

1.6.6 Record the result of para 1.6.5 on the printout of test program 38 (138) on the line for "MN INTERMOD".

1.7.0 **GUARD RECEIVER.**

1.7.1 Set RF output of generators #2 and #3 **OFF.**

1.7.2 Set guard receiver Rx frequency to 156.0000MHz. Set main receiver Rx frequency to 155.0000MHz and MN volume control to minimum (CCW).

1.7.3 Press and hold Squelch button. Set GUARD volume to approx. 10V. Adjust RF output of generator #1 to obtain 12dB SINAD.

1.7.4 Set RF output of generators #2 and #3 **ON** and adjust to obtain RF output equal to: RF output of generator #1 plus 70dB.

1.7.5 Press and hold Squelch button and note the indicated SINAD. The SINAD must be 6dB minimum.

1.7.6 The intermodulation is equal to:
70dB + (SINAD of para 1.7.5 minus 6dB)/2

1.7.7 Record the result of para 1.7.6 on the printout of test program 38 (138) on the line for "GRD INTERMOD".

2.0 DPL CODE TEST

2.1 Connect a microphone to the Unit Under Test.

2.2 Set up the TFM-138B Test Radio.

2.3 Tune both units to 157.00000MHz in the VFO mode (use F 1) and program a DPL code of 001 into the Rx and Tx positions.

2.4 Transmit on the UUT by using the microphone PTT and speak. Voice should be heard from the TFM-138B Test Radio.

2.5 Transmit on the TFM-138B Test Radio in the same manner. Voice should be heard from the UUT.

2.6 Repeat steps 3, 4 and 5 for the following DPL codes: 002
004
010
020
040
100
200
400

2.7 Set the DPL codes on the TFM-138B Test Radio to "000". (Leave "400" in the Unit Under Test).

2.8 Transmit on the TFM-138B Test Radio. NO voice should be heard on the UUT.

3.0 DF RECEIVER TEST

3.1 Set the CMT to AM mode, RF to 156.050MHz, 2.2uV, 50% modulation with 1.0KHz.

3.2 Set the UUT Main Rx to 156.050MHz, connect to CMT AF input the DF audio, terminated with 1Kohm impedance, and verify that the **SINAD** is more then 6dB.

3.3 Repeat para 3.1 and 3.2 for frequency 138.050MHz and 173.950MHz.

3.4 Set the CMT to 156.050MHz, 2.2uV, 50% modulation with 5.68KHz and verify that the amplitude is 250mV RMS minimum.

3.5 Set the CMT RF Output to 100mV and verify that the audio amplitude is 1.3 V RMS maximum and is not clipped or distorted.

3.6 Set the CMT RF Output to 1.0uV and FM mode.

4.0 120 MEMORY TEST

4.1 Recall memory #120 on the UUT.

4.2 Program a frequency of 174.00000MHz Rx and Tx.

4.3 Do the same for memories 99, 50 and 24.

4.4 Recall memories 120, 99, 50 and 24 to confirm the new frequency (174.00000MHz) is still there.

5.0 FINAL EXAMINATION OF TRANSCEIVER

5.1 Operate front panel switches and push button to verify correct mechanical operation.

5.2 Operate both volume controls and verify marking alignment, free rotation without friction/jamming and ON/OFF switch operation.

5.3 Operate keyboard buttons and verify push movement, must be without friction/jamming, verify correct placement of numbers and #, *.

5.4 Verify, by shaking the Transceiver, that there is no free/loose hardware inside the transceiver

5.5 Visually examine the Transceiver and verify that the outside appearance is good i.e. front panel clean, no scratches, labels in place, etc.

5.6 Verify/position slots of the front **DZUS** fasteners **HORIZONTALLY.**

This document contains designs and other information which are the property of Technisonic Industries Ltd. This document may not in whole or the parts, be duplicated or disclosed or used for manufacture of the part disclosed herein, without the prior permission of Technisonic Industries Ltd.

ACCEPTANCE TEST DATA SHEET FOR TFM-138D TRANSCEIVERS

DOCUMENT No. 986208
REVISION N/C
DATE OF ISSUE 8 JUNE 1998

SIGNATURE

TESTED IN ACCORDANCE WITH DOCUMENT NUMBER 986207 SOFTWARE NUMBER 97S026 97S027	ACCEPT ☐ REJECT ☐	SERIAL NUMBER
TEST TECHNICIAN		DATE
QUALITY CONTROL		DATE
GOVERNMENT/SOURCE INSPECT		DATE

Technisonic Industries Limited
250 Watline Avenue, Mississauga, Ontario L4Z 1P4
Tel: (905)890-2113 Fax: (905)890-5338

ACCEPTANCE TEST DATA SHEET

S/N: _____

MODEL: _____

		CHECK (✓)
1.0	Program 38 ***MUST BE*** attached	☐
	Program 39 (For TFM-138B & C) attached (as applicable)	☐
	Graph for Harmonic Attenuation ***MUST BE*** attached	☐
	Frequency for Main Rx Local Oscillator _____ MHz	
	Frequency for Guard Rx Local Oscillator _____ MHz	

2.0	**DPL Codes**	**VOICE HEARD ON TEST RADIO CHECK (✓)**	**VOICE HEARD ON UNIT UNDER TEST CHECK (✓)**
	001	☐	☐
	002	☐	
	004	☐	
	010	☐	
	020	☐	
	040	☐	
	100	☐	
	200	☐	
	400	☐	

		CHECK (✓)
Unit Under Test DPL code 000	No Voice Heard	☐
Test Radio DPL code 400		

		ACCEPT	REJECT
3.0	**DF RECEIVER**		
3.2	Rx sensitivity 156.050 Mhz, 2.2 uV ..... dB SINAD	☐	☐
3.3	Rx sensitivity 138.050 Mhz, 2.2 uV .....dB SINAD	☐	☐
	Rx sensitivity 173.950 Mhz, 2.2 uV ..... DB SINAD	☐	☐
3.4	DF Audio amplitude (minimum) ..... mV RMS	☐	☐
3.5	DF Audio amplitude (maximum) ..... V RMS	☐	☐
4.0	**120 MEMORY TEST**		
	Memories recalled correctly	☐	☐

		INITIALS		
5.0	**FINAL EXAMINATION OF TRANSCEIVER**	**Assembler**	**Technician**	**Q.C.**
	Operate front panel switches and push button to verify correct mechanical operation.	☐	☐	☐
	Operate both volume controls and verify marking alignment, free rotation without friction/jamming and ON/OFF switch operation. Knobs must be in the center of the holes.	☐	☐	☐
	Operate keyboard buttons and verify push movement, must be without friction/jamming, verify correct placement of numbers and #, *.	☐	☐	☐
	Verify, by shaking the Transceiver, that there is not any free/loose hardware inside.	☐	☐	☐
	Visually examine the Transceiver for good overall appearance.	☐	☐	☐
	Verify/position slots of the front **DZUS** fastners **HORIZONTALLY**.	☐	☐	☐

This document contains designs and other information which are the property of Technisonic Industries Ltd. this document may not in whole or the parts, be duplicated or disclosed or used for manufacture of the part disclosed herein, without the prior permission of Technisonic Industries Ltd.

FINAL ALIGNMENT PROCEDURES FOR TFM-138D

DOCUMENT No. 986205
REVISION A
DATE OF ISSUE FEBRUARY 11, 1999

SIGNATURE

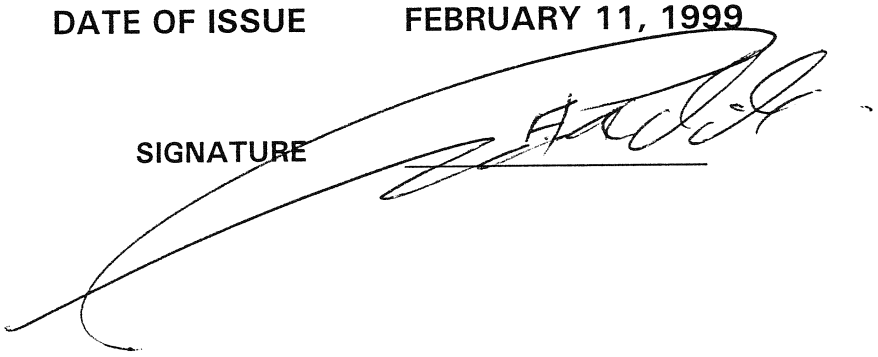

Technisonic Industries Limited

250 Watline Avenue, Mississauga, Ontario L4Z 1P4
Tel:(905)890-2113 Fax:(905)890-5338

TFM 138 Final Alignment Procedure

The front panel, MCU board and Guard RX\TX board should be already installed in the chassis. The antenna filter cover should be on and Q5 installed. The MCU board and the front panel should have been already tested and working. The Main RX/DF board and tray should not be installed.

1. Connect to power and CMT.
2. Verify transmitter operation on 138.30000 and 173.70000 MHz. (Power and modulation will be wrong but should at least exist.)
3. Check the voltage output on VR3 on the MCU board. The voltage on the center pin should be between 9.20 to 9.65 volts.
4. Check the voltages on VR1. The voltage on pin 3 should be 5 volts and the voltage on pin 1 should be between 11.8 and 13.5 volts.
5. Record these voltages on the alignment data sheet.

TX Strip Tuning:

1. Adjust R23 and R24 on the MCU board to fully counter clockwise.
2. Set the power switch on the front panel to HI.
3. Open L1 slightly.
4. Open L9 and L10 approximately 3/16".
5. Bend L6 3/4 way over.
6. Bend L3 1/4 way over.
7. Close L5 and L8.
8. With PTT on, tune C43 and C44 for maximum power at 138.3000 and 173.7000 MHz.
9. L3, L6, L9 and L10 may need some adjustment for best results.
10. Ensure that the RF Power is at least 15W on 138.3, 157.3 and 173.7MHz.

NOTE: The RF Power must be adjusted to maximum. A trade-off between 138.3, 157.3 and 173.7MHz may be required. (If 15W, 20W or more can be obtained on all frequencies that is acceptable)

Modulation Adjustment:

1. Disconnect TX audio cable from the CMT.
2. Program all the CTCSS tones to #64. (0.0 Hz)
3. Enter a frequency of 157.3000 MHz (in the direct entry mode).
4. Set transmitter power to LO.
5. Connect the DPL test board yellow lead to the top of R76 which is not installed.
6. Connect the DPL test board black lead to chassis and the red lead to the top of L32.

7. Press PTT and adjust R73 for a good DPL waveform on the CMT scope.

8. Release PTT.

9. Disconnect the DPL test board.

10. Connect TX audio cable to CMT.

11. Set the CMT for modulation level of +16 dBm and audio to 300 Hz.

12. Key PTT.

13. Adjust deviation pot R30 for a deviation of ±4.20 kHz.

14. Adjust the TX audio frequency slowly from 0 to 2500 Hz and confirm the radio does nothing unusual. (like TX cutting out etc.)

15. Release PTT.

16. Key the radio at 138.3 and 173.7 MHz and check if the deviation is higher. If so, use that frequency (with the highest deviation) for the rest of the modulation alignment.

17. Set the radio to narrow band (if capable) and key PTT.

18. Adjust R76 for a deviation of ±2.15kHz.

19. Release PTT and set the radio back to wide band.

20. Set CMT for 1000 Hz TX audio and a level of -10 dBm

21. Key PTT.

22. Adjust mic level pot R8 for a deviation of ±3.5 kHz

23. Release PTT.

24. Key PTT.

25. Adjust sidetone pot R37 for a level of +3dBm into a 600 ohm load.

26. Release PTT.

27. Disconnect TX audio cable from CMT.

28. Set a TX tone of #13. (103.5 Hz)

29. Key PTT.

30. Adjust the CTCSS level for a deviation of ±0.65 kHz.

31. Release PTT.

* Install the guard board and tray.

* Install the tuning covers.

* **ALL** screws in the radio **MUST** be tight before continuing.

TX Power Adjustment:

1. Connect transceiver directly to CMT. (Not through a wattmeter)
2. Turn TX power detect trimmer C46 half way out.
3. Tune the transceiver to 173.70000 MHz.
4. Switch the power select switch to HI.
5. Press PTT and adjust R23 for 10 watts.
6. Verify using DVM that the DC voltage on L2 and/or on L38 (DC feed point) is less than 6.5V for 10W RF output. Record these results on the alignment data sheet.
7. Tune the transceiver to 138.3000 MHz.
8. Press PTT and check the output power.
9. If the power was less than 10 watts, turn the trimmer C46 out slightly and go back to step 3.
10. Verify using DVM that the DC voltage on L2 and/or on L38 (DC feed point) is less than 6.5V for 10W RF output.
11. If the power was more than 10 watts, turn the trimmer in slightly and go back to step 3.
12. If the power was 10 watts at 138.3 and 173.7 MHz then tune to 173.7 MHz and while pressing PTT, tune R23 for 9.6 watts.
13. Switch the power select to LO power.
14. Press PTT and tune R24 for 1 watt.
15. While still transmitting, adjust C87 for a TX frequency of exactly 173.70000 MHz on the CMT.

Receiver VCO Tuning:

NOTE: TFM 138D board configuration is: Guard Rx/Tx Module and Main Rx/DF Module

1. After the radio and the spectrum analyzer have been on at least 5 minutes, tune the main receiver to 157.3000 MHz and the guard receiver to 173.7000 MHz.
2. Connect the RF sniffer loop to the spectrum analyzer and place the loop through one of the holes in the in the test cover near the VCO.
3. Set the spectrum analyzer:
   Center frequency - 168.0000 MHz
   Span - 1 kHz
   RBW - 300 Hz
   Reference Level - -40 dBm
4. Check that the Main Rx VCO is at exactly 168.0000 MHz. If not, adjust C50.
5. Tune the main receiver to 173.70000 MHz.
6. Tune the guard receiver to 157.30000 MHz and check that the Guard Rx VCO is at exactly 168.0000 MHz. If not, adjust C84.

FM Demodulator Adjustment:

1. Connect the transceiver to the CMT.
2. Check sensitivity of the main receiver just to confirm operation. (on 157.3000 MHz)
3. Set CMT to 1 mV signal out at ± 3kHz deviation, 1kHz audio.
4. Tune the quadrature coil for maximum signal and then for minimum distortion. Distortion is typically between 1.4 and 3 %.
   NOTE: There are 3 peaks in the tuning range of the coil, choose the largest one.(It is the center peak.)
5. Set CMT to 1mV signal out at ± 5kHz deviation, 1kHz audio.
6. The distortion must be less than 3.8%. If not, re-tune the quadrature coil and repeat step 3 and 4.
7. Do the same above procedure for the guard receiver.

Mirror Image Adjustment:

1. Tune the Guard receiver to 173.60000 MHz.
2. Set CMT to 173.60000 MHz.
3. Adjust signal out to get 12 dB SINAD on the receiver. Record this level in dBm.
4. Set the CMT to 195.00000 MHz.
5. Adjust signal out to get 12 dB SINAD again.
6. Adjust C27 and C51 to get the highest signal level possible for 12 dB SINAD.
7. Tune Guard receiver to 138.60000 MHz.
8. Set the CMT for 160.00000 MHz.
9. Adjust L19 and L27 to get the highest signal level possible for 12 dB SINAD.
10. Tune the Guard receiver to 173.60000 and go to step 4. until no more adjustment is required.
11. The difference between the level recorded in step 3. and the ones in step 6. and step 9. should be at least 80 dB.
12. Use the same procedure on the Main receiver, adjust C12, C25 and L8, L12.

Squelch Setting:

1. Set the CMT to 138.30000 MHz at 1.4μV.
2. Tune the main RX to 138.30000 MHz and adjust the squelch so that the receiver is just staying open.
3. Set the output of the CMT to 1.0μV and confirm the receiver is completely closed. (squelched)
4. Do the same test for the guard receiver.

Scanning Check:

1. Set the signal generator on the CMT to 157.32500 MHz at 5.0 uV.
2. Program memory number 001 to 146.00000 MHz and memory number 002 to 157.3250 MHz
3. Select scanning by pressing FUNC and then 5. The scanning should stop at memory number 002.
4. Press SCAN again to exit this mode.

RX Audio Response:

1. Set CMT for 157.3000 MHz, level @ 1mV, deviation @ 3kHz and audio @ 1kHz. Disconnect the modulation generator.
2. Adjust the audio output on the main receiver to -10 dBm.
3. Set AF on the CMT to 400 Hz. The resulting audio output must be between -1 dBm and -6.5 dBm.
4. Set AF on the CMT to 3000 Hz. The resulting audio output must be between -16.5 dBm and -24 dBm.
5. Perform the same test on the guard receiver.

TX Audio Response:

1. Connect the CMT modulation generator and set to 3000 Hz.
2. Press PTT.
3. Adjust the modulation generator level to obtain a deviation of 3 kHz. The demodulated sine wave should not be clipped.
4. Set the modulation generator to 2500 Hz. The deviation should be between 2.8 kHz and 3.6 kHz.
5. Set the modulation generator to 1000 Hz. The deviation should be between 1.2 kHz and 1.7 kHz.
6. Set the modulation generator to 300 Hz. The deviation should be between 350 Hz and 700 Hz.
7. Release PTT.

DF Receiver Adjustment

1. Set the CMT to 157.300MHz, 2.0uV RF Output, 50% modulated with 1KHz audio.
2. Tune the Main Rx to 157.3000MHz and connect the DF Audio, terminated with 1Kohm impedance, to
3. CMT AF Audio input. Enable the DF Audio by "Open Circuit" of the "DF Mute" control line.
3. Adjust L21 and L22 to obtain maximum SINAD (12dB minimum) and maximum audio amplitude, as displayed on CMT. If displayed audio waveform is clipped, decrease the amplitude by adjusting R51.
4. Set CMT RF Output to 100mV and adjust with R51 the AF Audio level to 1.0V RMS as displayed on CMT. The audio distortion must be less then 5%, if not, slightly re-adjust L22.
5. Ground the "DF Mute" control line and verify that the DF Audio level is less then 0.01V RMS.
6. Set CMT RF Output to 1mV, 50% modulated with 5.680KHz. Remove short from the "DF Mute" control line and if required, re-adjust R51 to obtain 0.70V RMS as displayed on CMT.
7. Connect CMT modulation audio to oscilloscope channel 1 and DF Audio to channel 2. Set the oscilloscope time base to 100usec/div., synchronization trigger to channel 1.
8. Adjust the amplitude of both channels/traces to be the same, approximately 80% of the screen height.
9. Set the oscilloscope time base to 10usec/div. and measure the time difference between the peak of the sine wave signal of channel 1 and channel 2. The difference shall be less then ±9.30usec. If not adjust with value of C75, between 270pF and 390pF and/or with R51 and L22.

   *NOTE: **The step 9. is verifying that the phase shift/delay is within the limits of 180°±20°. The CMT Tester has internal shift of 180° between modulating audio and the modulated signal envelope, therefore the test limit is 0°±19°. 1°=0.489usec.***

10. Set CMT RF Output to 2.0uV, 50% modulated with 5.68KHz, connect the DF Audio to the CMT AF Input and verify that the DF Audio, as displayed on the CMT is at least 250mV RMS. In sequence, set the RF Output to 1mV, 10mV, 100mV and 500mV (RF generator max. output) and verify that the audio amplitude is between 250mV and 1.20V RMS. If not re-adjust with R51 and repeat step 9.

This document contains designs and other information which are the property of Technisonic Industries Ltd. This document may not in whole or the parts, be duplicated or disclosed or used for manufacture of the part disclosed herein, without the prior permission of Technisonic Industries Ltd.

ALIGNMENT DATA SHEET FOR TFM-138D TRANSCEIVER

DOCUMENT No. 986206
REVISION N/C
DATE OF ISSUE 8 JUNE 1998

SIGNATURE

TESTED IN ACCORDANCE WITH DOCUMENT NUMBER 986205	ACCEPT ☐ REJECT ☐	SERIAL NUMBER
TEST TECHNICIAN		DATE
QUALITY CONTROL		DATE
GOVERNMENT/SOURCE INSPECT		DATE

Technisonic Industries Limited

250 Watline Avenue, Mississauga, Ontario L4Z 1P4
Tel: (905)890-2113 Fax: (905)890-5338

TFM Series Alignment Data Sheet Doc# 966156

Voltage Regulators:

Voltage on VR1 pin 3 - _____volts. (4.8 to 5.2v)

Voltage on VR3 pin 2 - _____volts. (9.2 to 9.55v)

Voltage on L17 - _____volts. (11.8 to 13.5v)

TX Strip tuning:

Maximum power @ 138 MHz - _____watts.

Maximum power @ 156 MHz - _____watts.

Maximum power @ 174 MHz - _____watts.

(maximum power at any frquency must be more than 15 watts)

Control voltage for 138 MHz @ 1 watt - _____volts.

@ 10 watts - _____volts.

Control voltage for 156 MHz @ 1 watt - _____volts.

@ 10 watts - _____volts.

Control voltage for 174 MHz @ 1 watt - _____volts.

@ 10 watts - _____volts.

(Maximum control voltage for any frequency at 10 watts is 6.5 volts measured at L2 or L38.)

TX Power Leveling:

TX start up time for 1 watt - _____ms. (0 to 30ms.)

TX start up time for 10 watts - _____ms. (0 to 30ms.)